Pneumatic Logic Training Manual

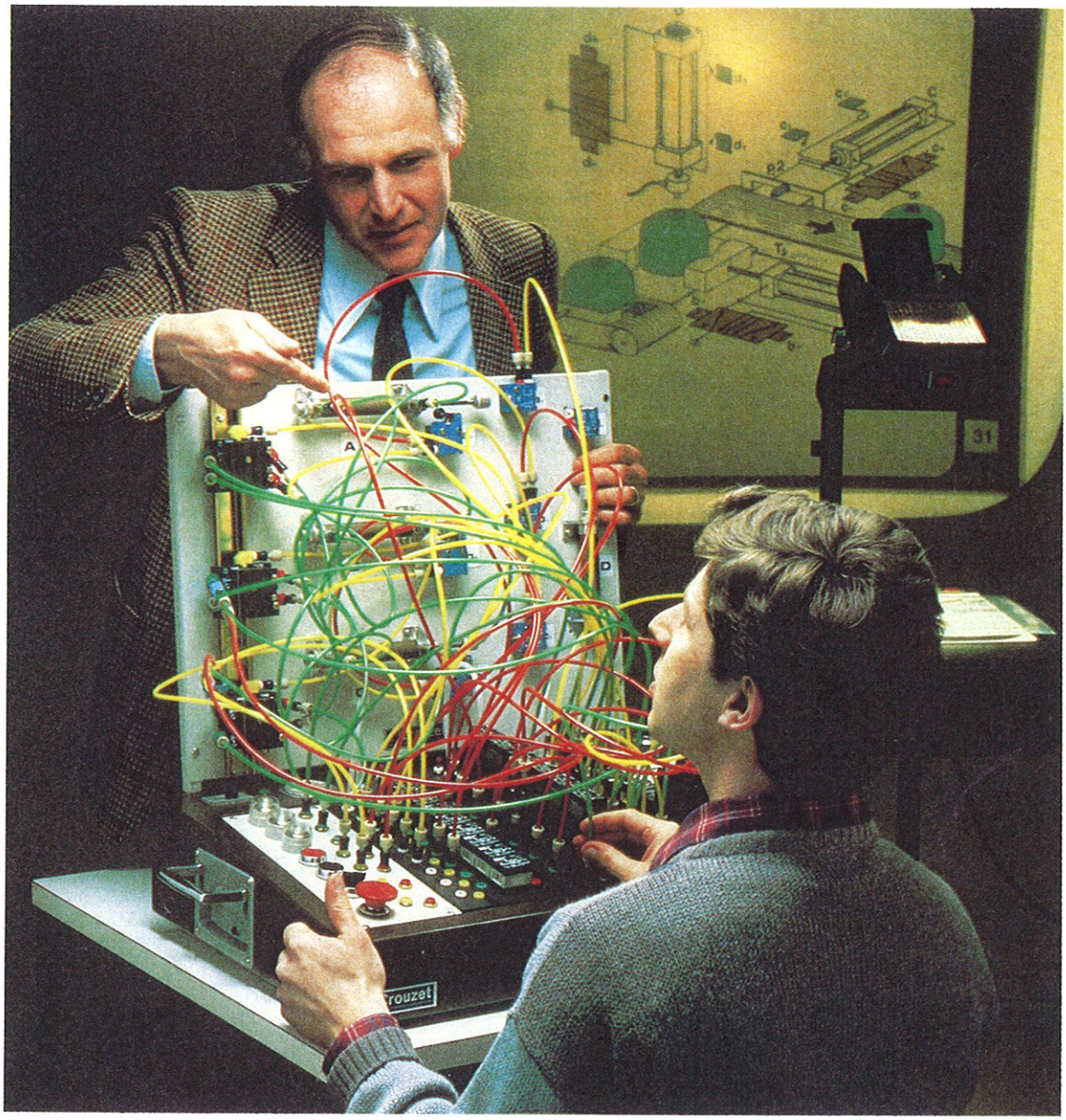

Crouzet®

SUMMARY

page

GENERAL INFORMATION ____ 2

1 — IMPLEMENTATION ____ 3

2 — BASIC LOGIC FUNCTIONS ____ 13

3 — PERIPHERAL COMPONENTS ____ 25

4 — PNEUMATIC SEQUENCER ____ 47

5 — APPLICATION EXERCISES ____ 57

General Information

Condition of air required:

— non lubricated, filtered to at least 50 micron.
— operating pressure generally in the range 2 bar-8 bar.

Connections:

— All connections to the logic elements are of the push-in type, usually 4mm outside diameter
— Connections are numbered and colour coded.
Port 1 – Green – Input
Port 2 – Yellow – Supply/2nd Input
Port 3 – Red – Output

Logic Functions:

They are usually written in the form of algebra where letters are used to signify each input signal and signs between the letters show the relationship of one to another.
A + B means A or B
A . B means A and B

If a bar or line is placed above a letter or letters it means the negative or inverse value.
Thus $\bar{A}$ means Not A
Therefore if A = 1, then $\bar{A}$ = 0

In logic circuits, the figure 1 is often used to signify positive signals and 0 to signify no signal.

1

1 — IMPLEMENTATION

— Control panel

— Sequencer sub-base

— Logic sub-base

— Front connection sub-bases for sequencer module

— Logic sub-bases with rotating front connections

— Symbols used

Crouzet®

Control panel

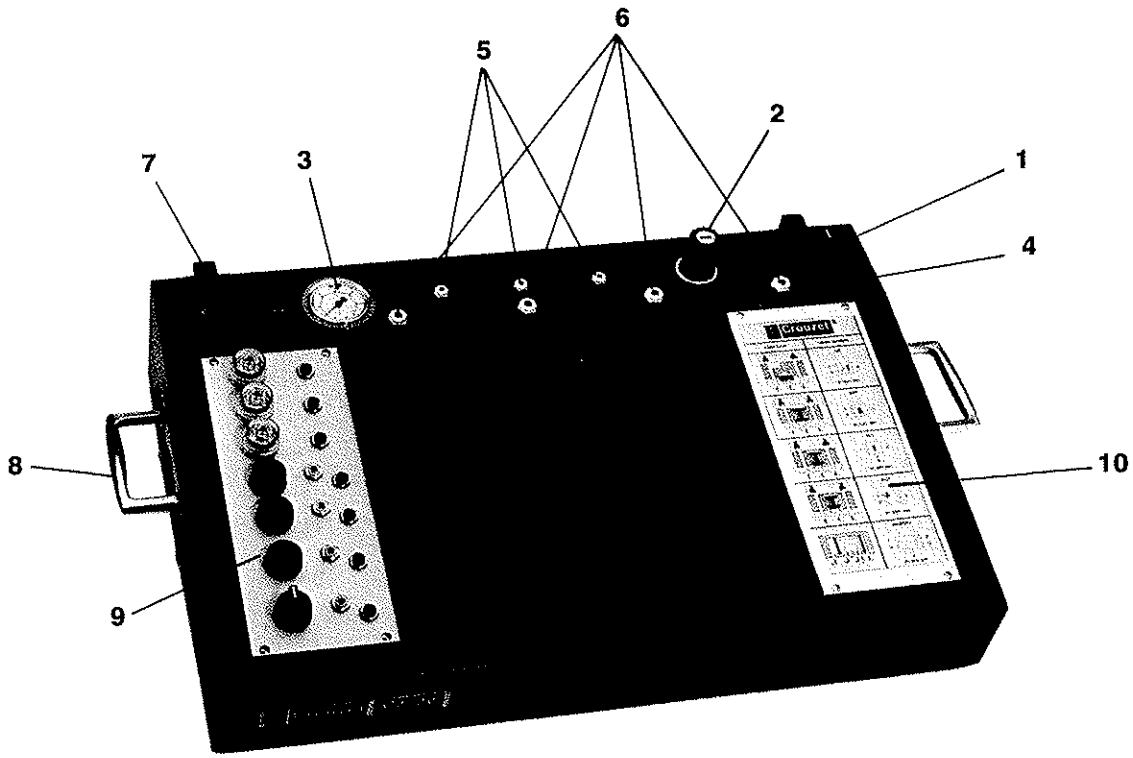

1 — On-off switch

2 — Pressure Filter Regulator

3 — Pressure Gauge

4 — Supply Connection to console ø 6mm

5 — Manifold Connections ø 4mm

6 — Manifold Connections ø 6mm

7 — Impulse Counter

8 — Fold-a-way Handles

9 — Switch & Indicator Panel

10 — Extension Plate

Sequencer sub-base

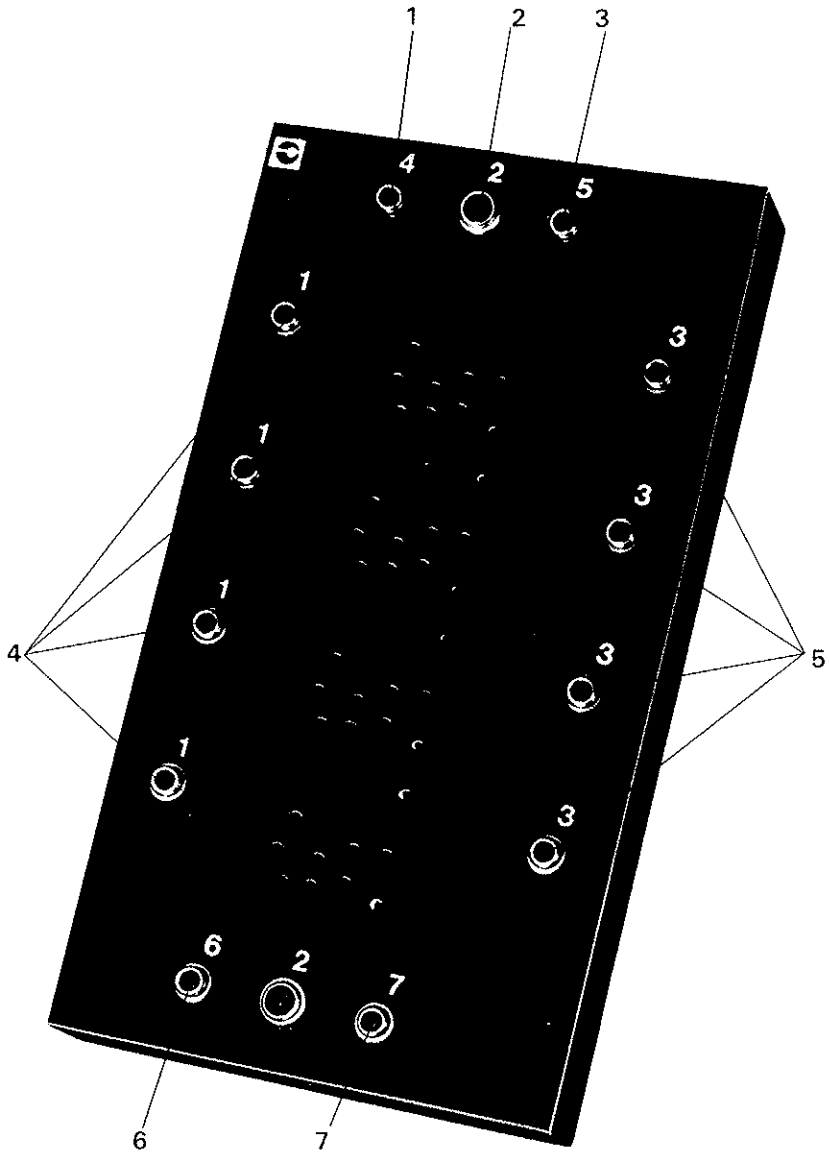

1 — «START CYCLE» signal port 4 – colour green

2 — Supply pressure – colour yellow

3 — «CYCLE ON» signal port 5 – colour red

4 — Input port 1 – colour green

5 — Output port 3 – colour red

6 — «END OF CYCLE» signal port 6 – colour red

7 — «RESET» signal port 7 – colour green

When the number of sequencer modules on one base is insufficient a second base should be used connecting up:

— the air supplies (port 2) with 6mm dia tubing;
— the 'end of cycle' signal of the first base (port 6) to the 'start cycle' signal of the second base (port 4);
— the 'cycle on' signal of the second base (port 5) to the 'reset' signal of the first base (port 7).

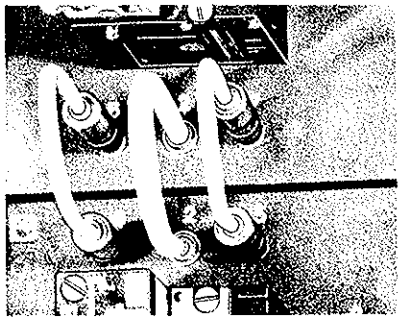

When there are too many sequencer modules on a base to solve a problem:

— By-pass the sequencer modules by connecting the output (port 3) to the input (port 1) of the same sequence module.

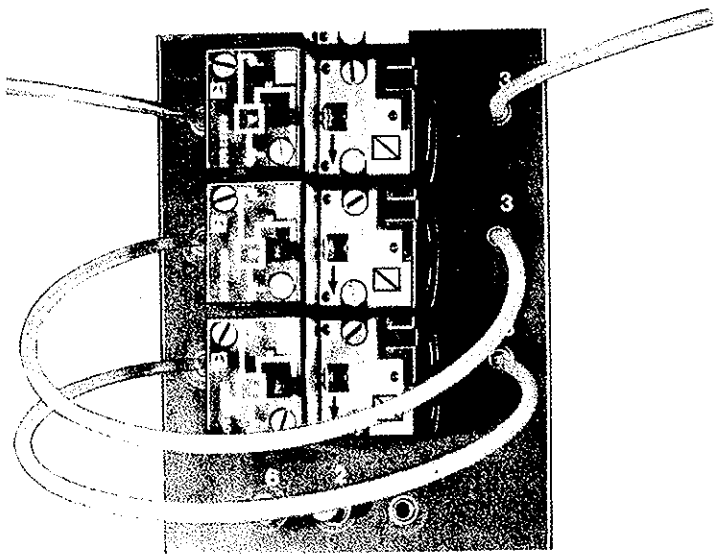

Logic sub-base

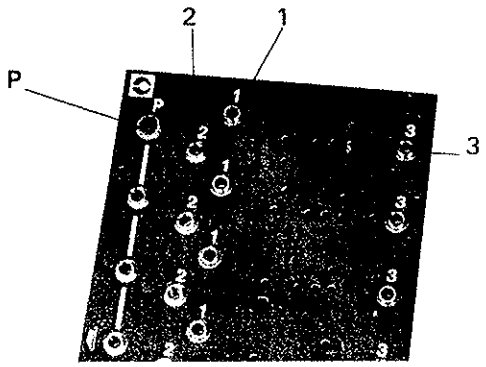

Connections for logic elements

P — Supply pressure

1 — Input – colour green

2 — Supply pressure or 2nd Input – colour yellow

3 — Output – colour red

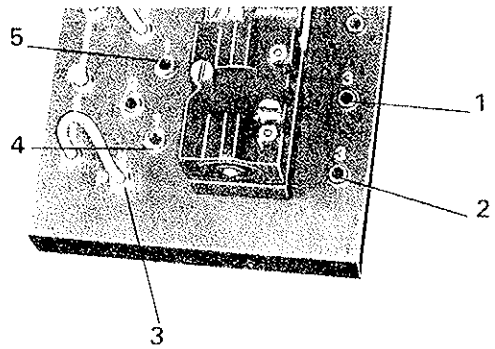

Connections for Memory

1 Port 3 — Output signal rest position

2 Port 3 — Output signal work position

3 Port 2 — Supply pressure

4 Port 1 — Control signal work position

5 Port 1 — Control signal rest position

6 Port 2 — Exhaust

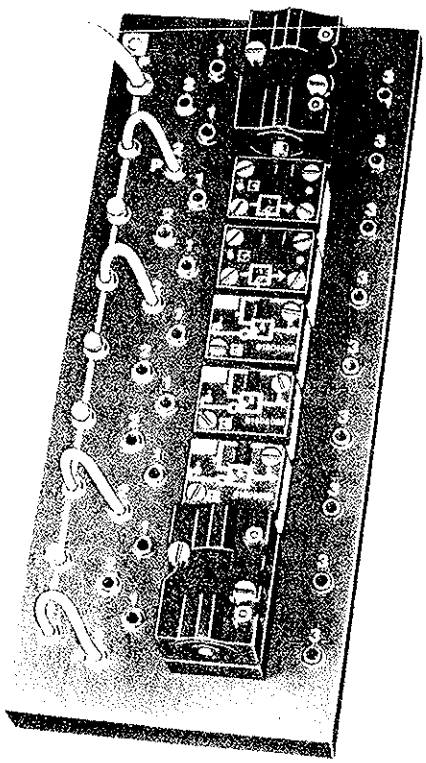

Connecting the sub-base manifold

Connect the 6mm port on the sub-base to a 6mm connection on the console manifold.
Outlets on the manifold not in use should be plugged.

Front connection sub-bases for sequencer module

fixing onto symmetrical DIN rail

Sequencer module sub-base

The sequencer modules screw onto modular sub-bases which link up from one module to another.
An inlet and outlet end base are needed to connect up the supply pressure, start cycle, and reset signal.

A — Rotating instant fitting connections for 4mm ext. dia. nylon tube.
- ● Input port 1 - colour green
- ● Output port 3 - colour red

B — ¼ turn fixing latch on DIN rail.
C — Identification area
D — Sub-base inter-assembly device.

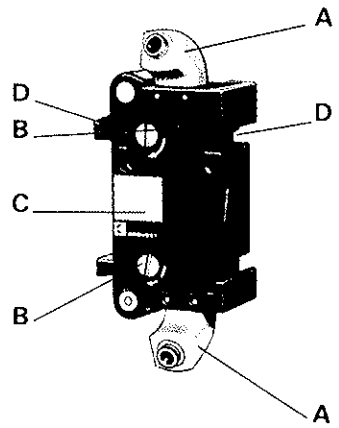

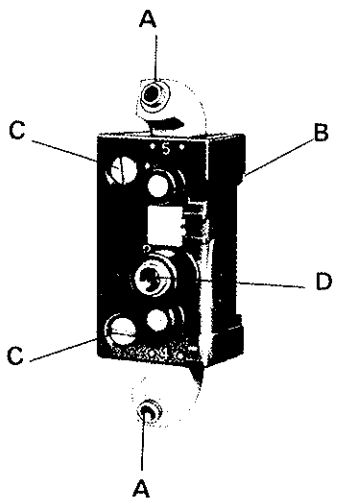

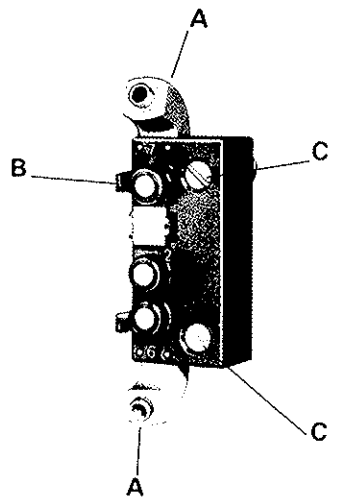

A — Rotating instant fitting connections for 4mm ext. dia. nylon tube.
- ● Input port 4 - «START CYCLE» colour green
- ● Output port 5 - «CYCLE ON» colour red
- ● Input port 7 - «RESET» colour green
- ● Output port 6 - «END OF CYCLE» colour red

B — Pinch assemble device.
C — ¼ turn fixing latch on DIN rail.
D — Pressure supply port with push-in connection for 6mm ext. dia nylon tube.

Logic sub-base with rotating front connections

Memory sub-base

It is comprised of 2 sub-bases which are mechanically assembled and inseparable.

A — Rotating instant fitting connections for 4mm ext. dia. tube.
- Input ports 1 - colour green
- Output ports 3 - colour red
- Supply pressure port - colour yellow.

B — ¼ turn fixing latch on DIN rail.

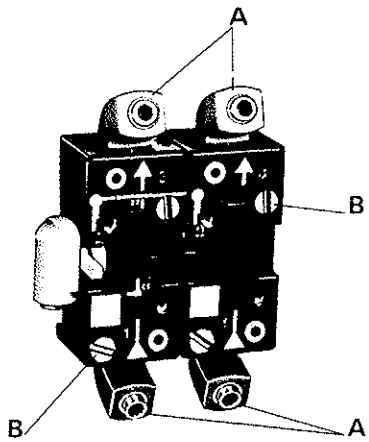

Single sub-base

It enables separate connection of an element to 3 ports.

A — Rotating instant fitting connection for 4mm ext. dia. tube.
- Input port 1 - colour green
- Input port 2 - colour yellow
- Output port 3 - colour red

B — ¼ turn fixing latch on DIN rail.

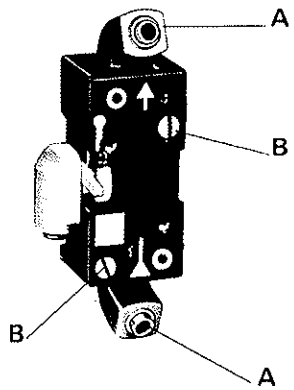

Associable sub-base

The joinable base – is fitted with a connection selector enabling integrated connection between each base.

A — Rotating instant fitting connections for 4mm ext. dia. tube.
- Input port 1 - colour green
- Input port 2 - colour yellow on end sub-base only
- Output port 3 - colour red.

B — ¼ turn fixing latch on DIN rail
C — Interconnecting device
D — Selector

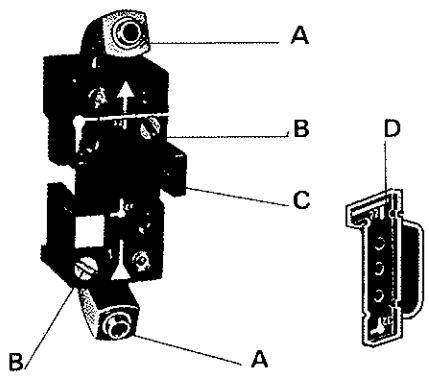

The selector is connected into the sub-base in one of two positions which can result in two types of intercomponent links.

POSITION 2 2: Common supply (Parallel)

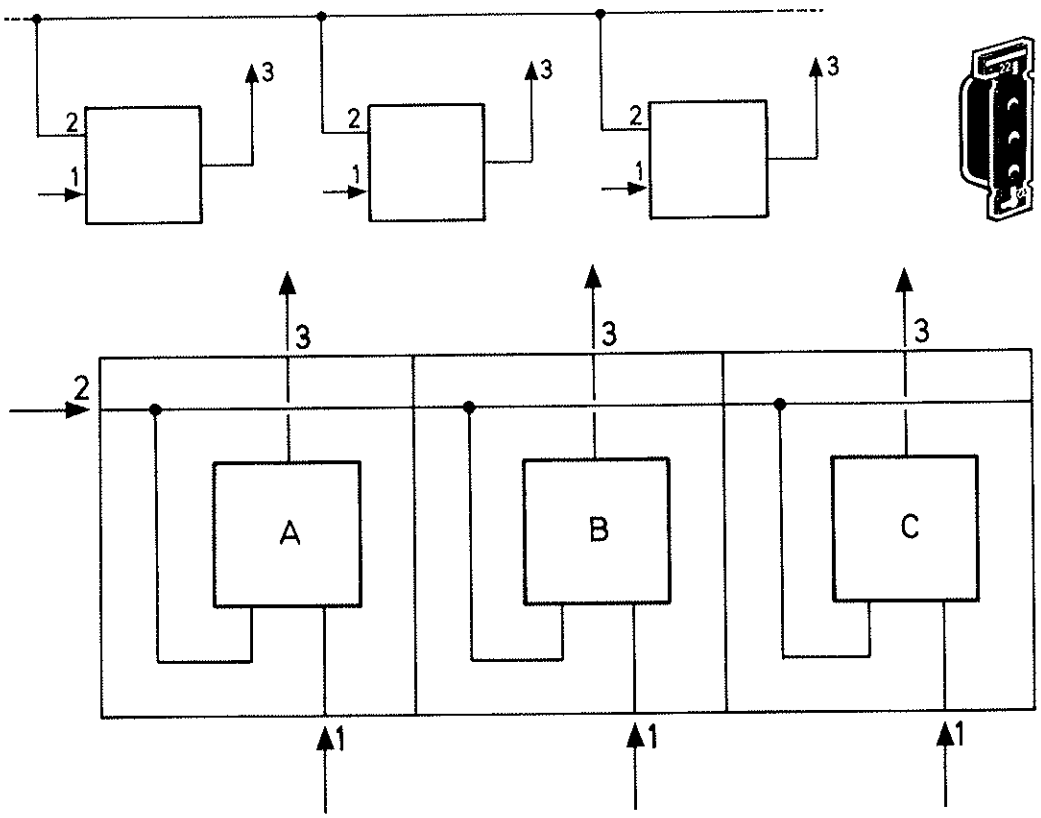

POSITION 3 2: Cascade (Series)

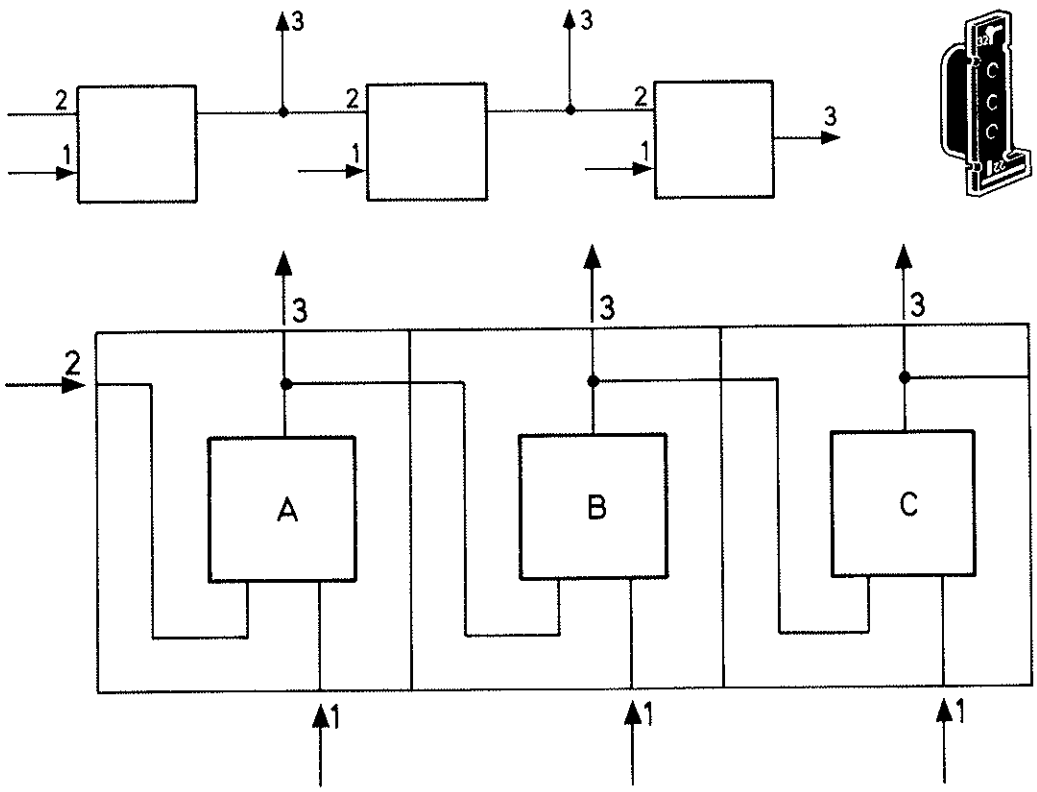

Examples of diagram possibilities

a) Cascade assembly

Logic diagram

Selector position

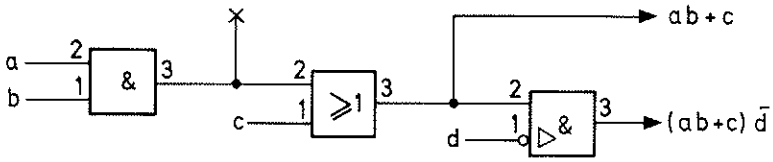

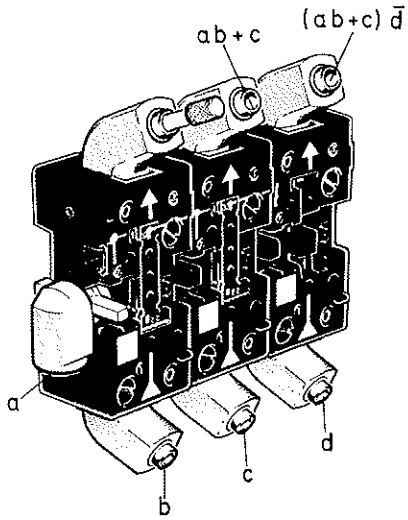

b) Common supply assembly

— with a common power supply pressure for the active Yes-Not elements or peripheral components.
— with a common variable (eg: common on signal).

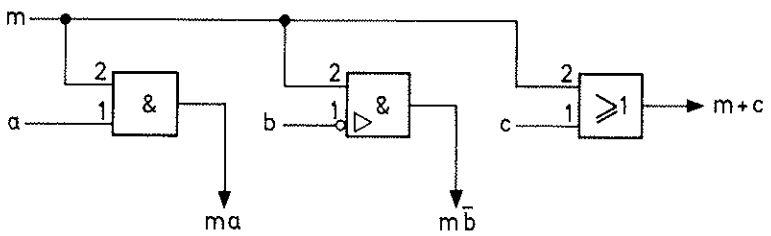

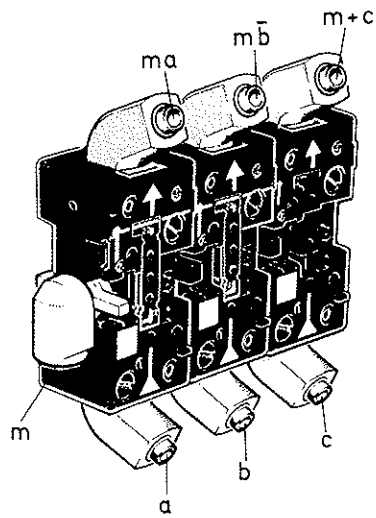

c) Mixed assembly

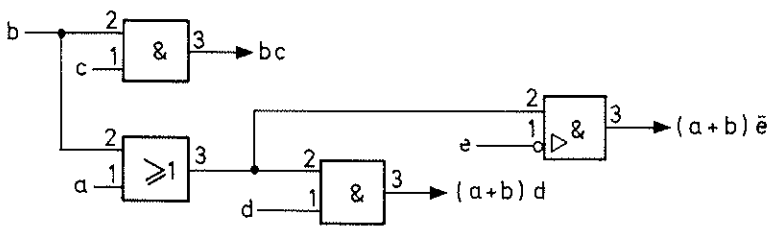

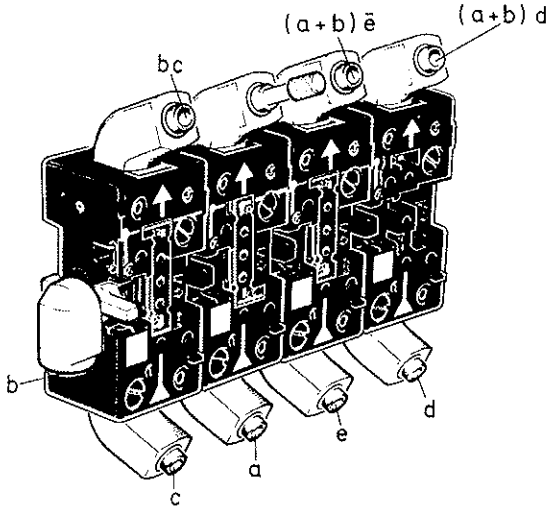

Symbols used

	Old	New
Basic cells		
AND		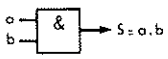
YES		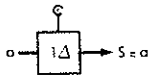
Memory (flip-flop)	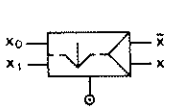	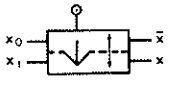
OR		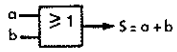
NOT		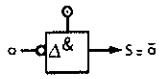
Inhibit		
Pressure decay sensor		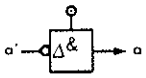
Pneumatic amplifier		
Amplifiers normally closed		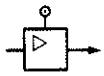
normally open		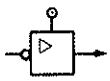
Relays for bleed sensor		
normally closed		
normally open		
Relay cell		
normally closed		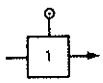
normally open		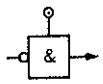
Adjustable Pressure or Vacuum switch		
normally closed		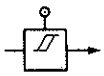
normally open		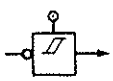
Microvalves		
normally closed	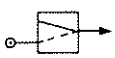	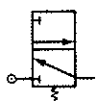
normally open	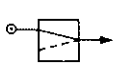	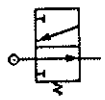

	Old	New
Limit valve		
normally closed	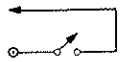	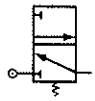
Timers		
Time delay 0,2 or 0,4 seconds normally closed		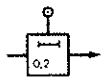
normally open		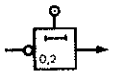
Adjustable timer normally closed		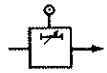
normally open		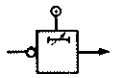
Impulse generator		
Adjustable impulse generator		
Frequency generator	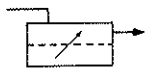	
Auxiliary components		
Pressure switch		
Solenoid valve	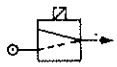	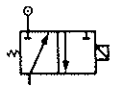
Uni directional flow restrictor		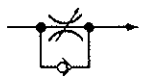
Pressure-Regulator		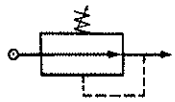
Vacuum generator		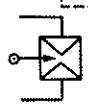
Program sequencer		
Maintained position		
With automatic reset		
Shift register		
Maintained position		
With automatic reset		

2

2 — BASIC LOGIC FUNCTIONS

— OR FUNCTION

— AND FUNCTION

— YES FUNCTION

— NOT FUNCTION

— Combining basic functions

— Piping up to produce an equation

— Equation diagrams

— Writing the equation and drawing the diagram

— Transforming the equation and drawing the logical diagram

— MEMORY FUNCTION

Crouzet®

"OR" FUNCTION

Symbol	Equation	Truth Table	Rest state
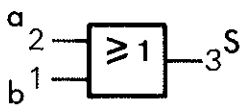	s = a + b	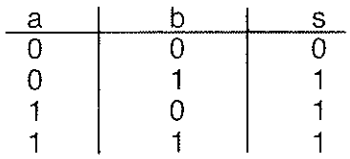	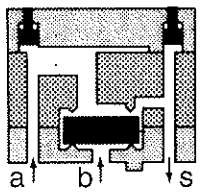

a	b	s
0	0	0
0	1	1
1	0	1
1	1	1

Colour:blue

Example:

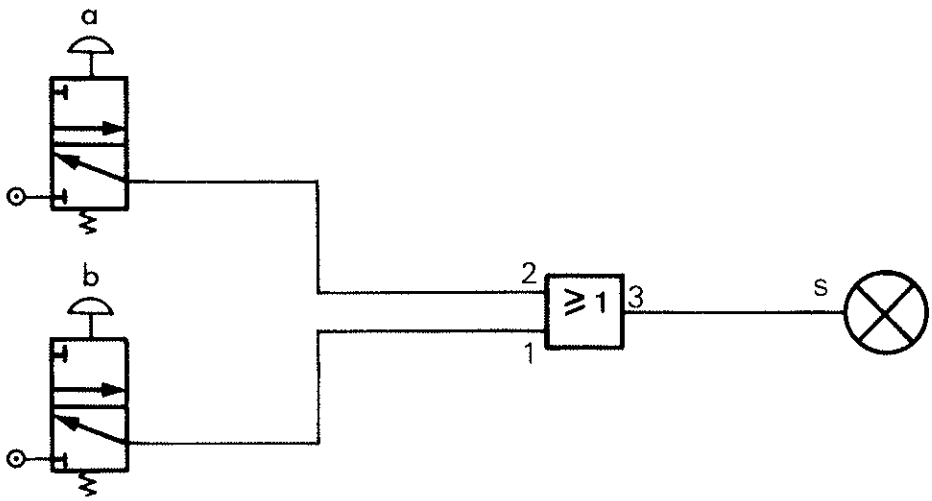

The output signal "s" is present when either signal "a" or "b" is present.

"AND" FUNCTION

Symbol	Equation	Truth Table	Rest state
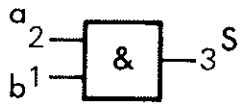	s = a . b	a | b | s 0 | 0 | 0 0 | 1 | 0 1 | 0 | 0 1 | 1 | 1	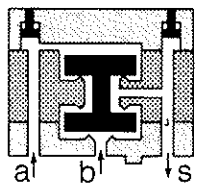

Colour:green

Example:

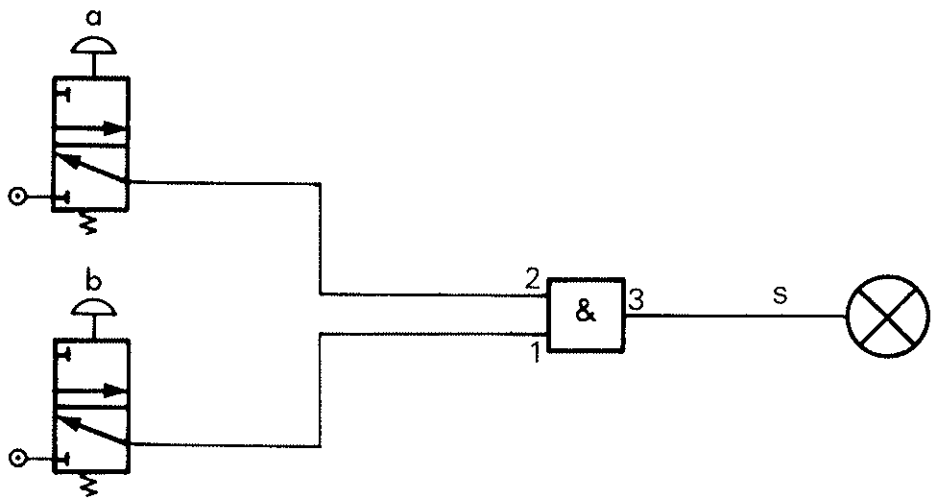

The output signal "s" will only be present when both signal "a" and "b" are present simultaneously.

"YES" FUNCTION

Symbol	Equation	Truth Table	Rest state
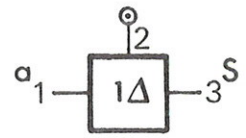	s = a		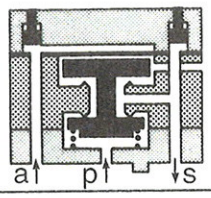

Colour:yellow

Example:

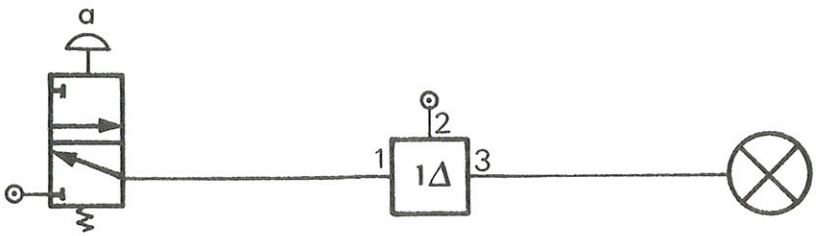

The output "s" is present if the signal "a" is present.

Vary the supply pressure and measure the control pressure. (Note an additional pressure regulator ref. 81·527·001 and pressure gauge ref. 81·530·001 will be required on the standard C2-20 system)

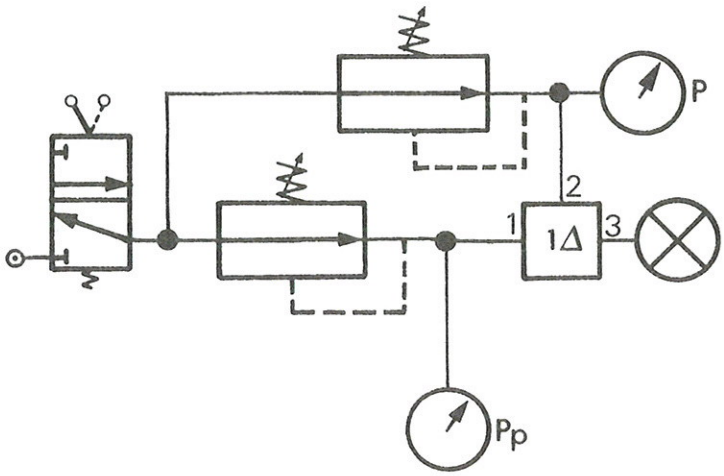

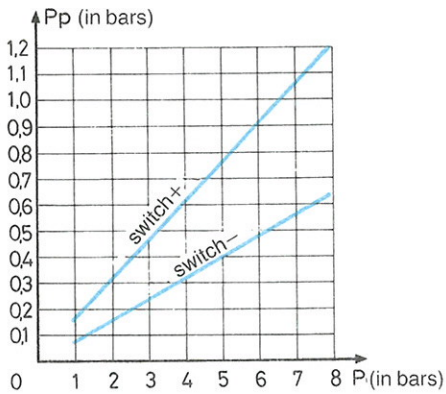

Switch + : output signal appears.

Switch – : output signal disappears.

From these curves it can be said that the YES element is a normally closed amplifier with a gain of approximately 7:1

"NOT" FUNCTION

Symbol	Equation	Truth Table	Rest state
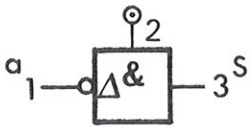	$s = \bar{a}$	a | s 0 | 1 1 | 0	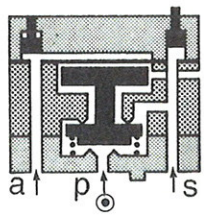
Inhibition 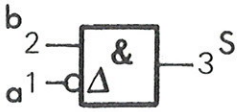	$S=\bar{a}.b$	a | b | s 0 | 0 | 0 1 | 0 | 0 1 | 1 | 0 0 | 1 | 1	

Colour:light grey

Example:

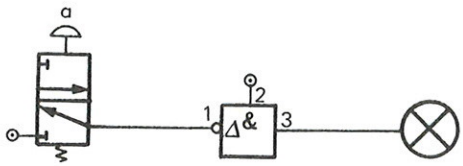

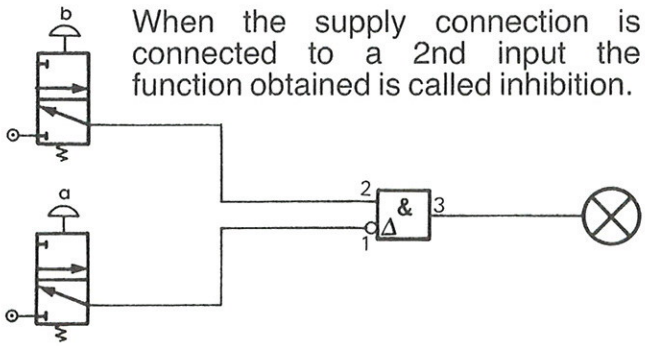

When the supply connection is connected to a 2nd input the function obtained is called inhibition.

In the absence of signal "a" the output "s" is on. When signal "a" is applied "s" will go off. Vary the supply pressure and measure the control pressure. (Note an additional pressure regulator ref 81·527·001 and pressure gauge ref 81·530·001 will be required on standard C2-20 system)

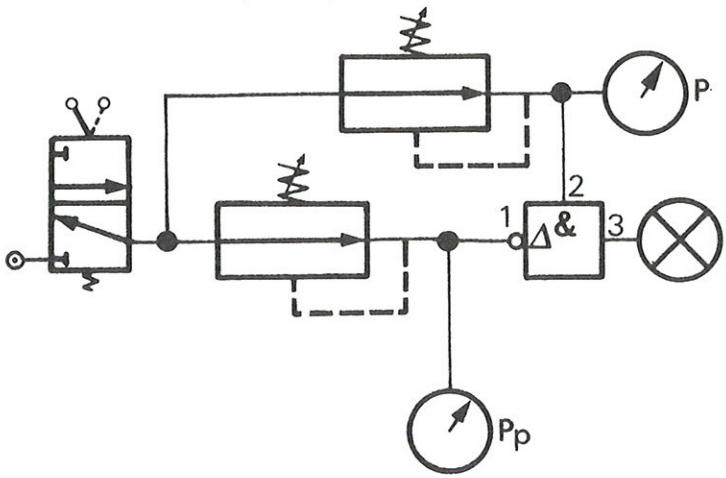

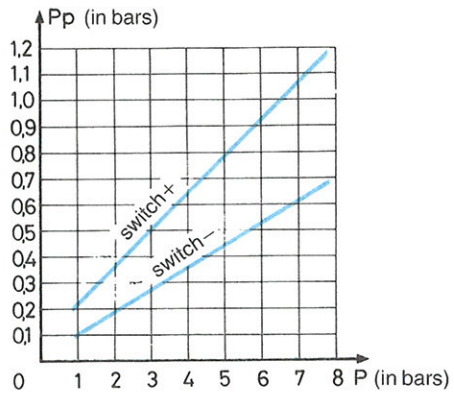

Switch + : the output signal disappears.

Switch – : the output signal appears.

From these curves it can be said that the NOT element is a normally open amplifier with a gain of approximately 7:1

Combining basic functions

EXERCISE:
When buttons a or b or c are pressed the indicator goes on, it remains on as long as one of the buttons is pressed.

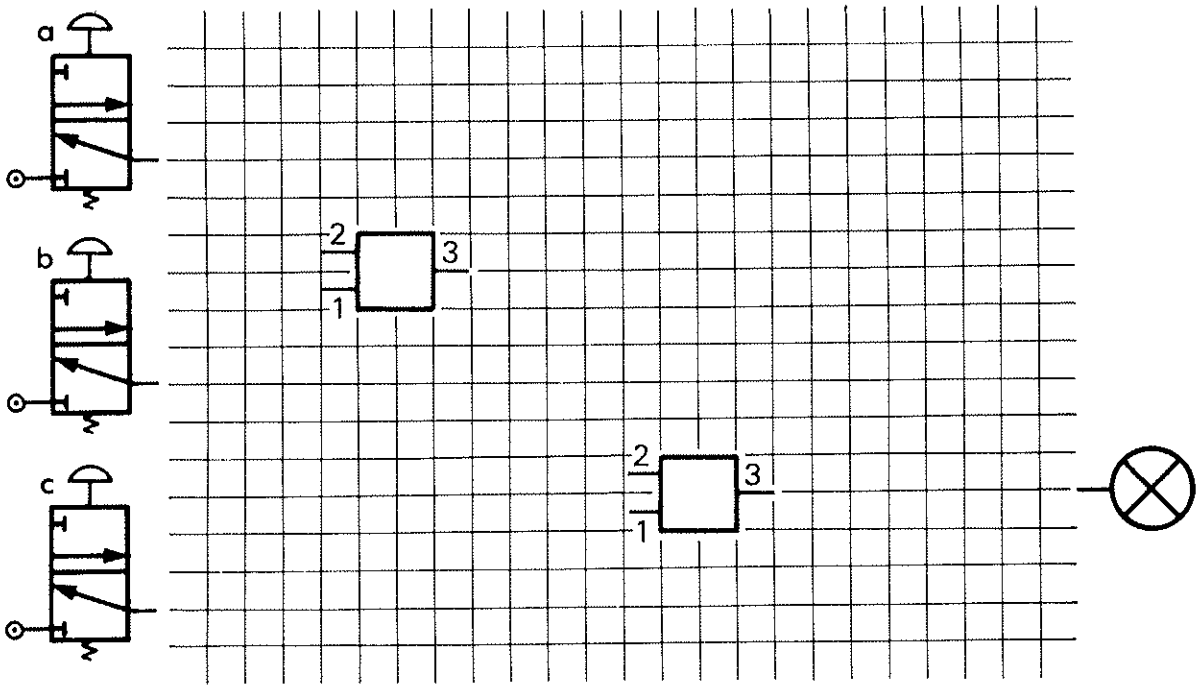

EXERCISE:
When buttons a and b and c are pressed the indicator goes on; as soon as one of the buttons is released the indicator goes off.

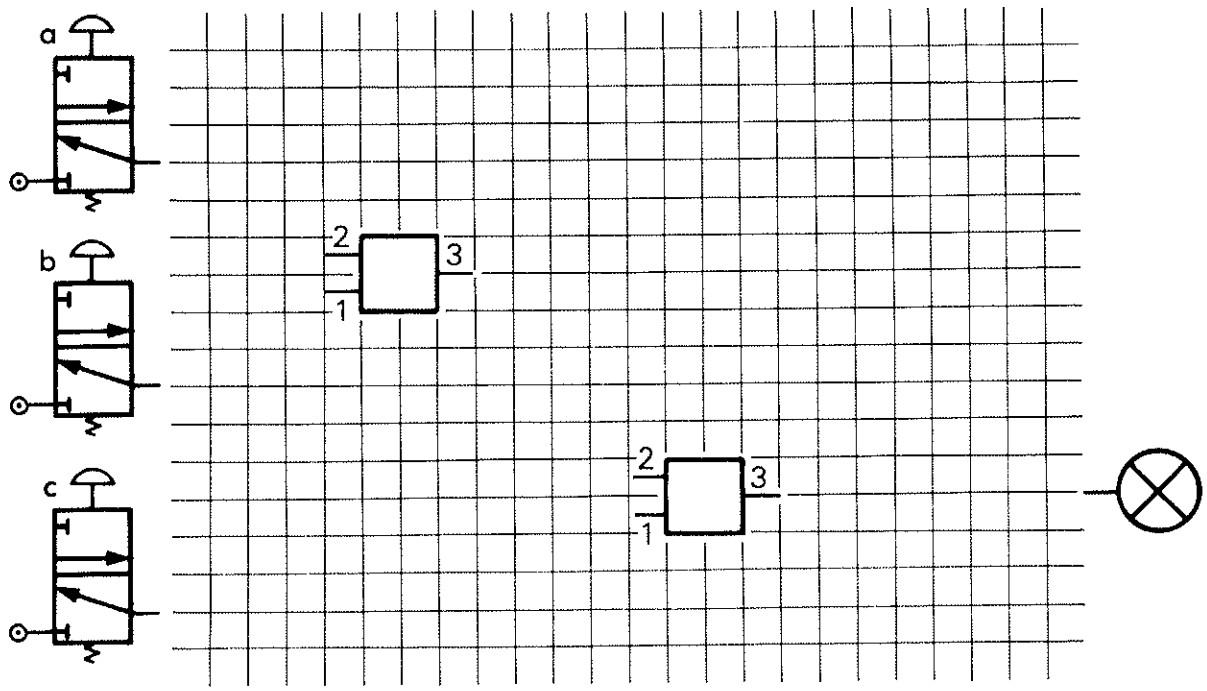

Equation Diagrams

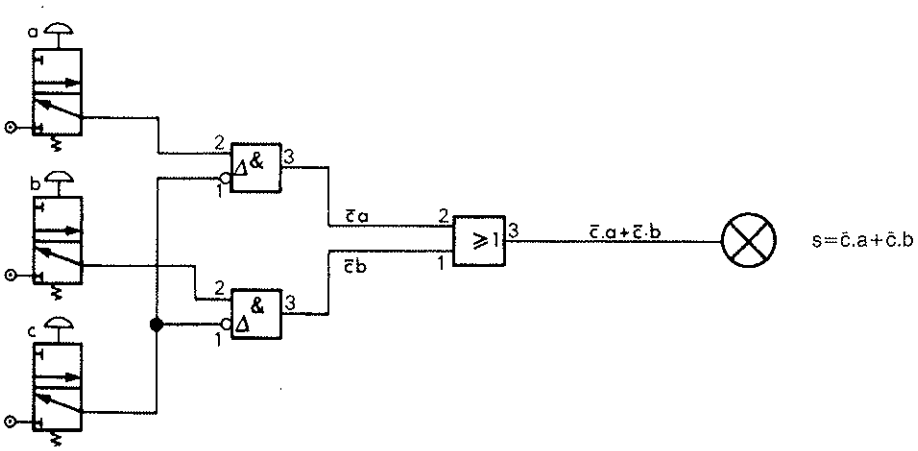

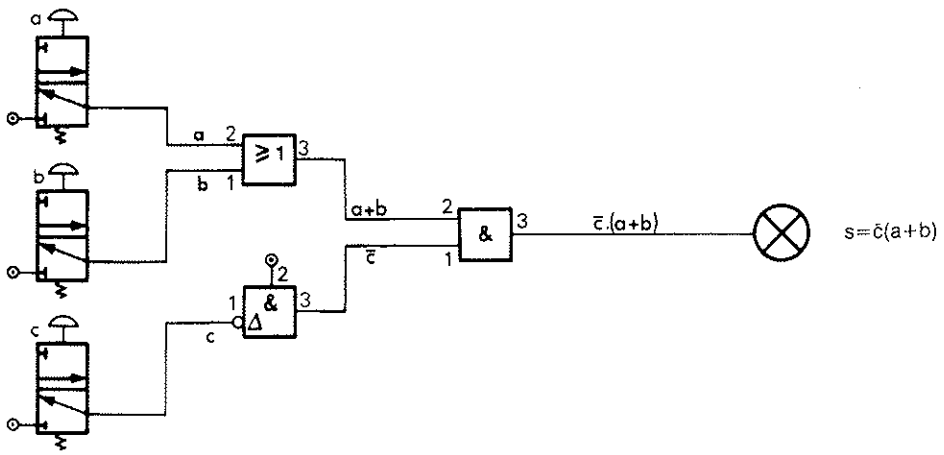

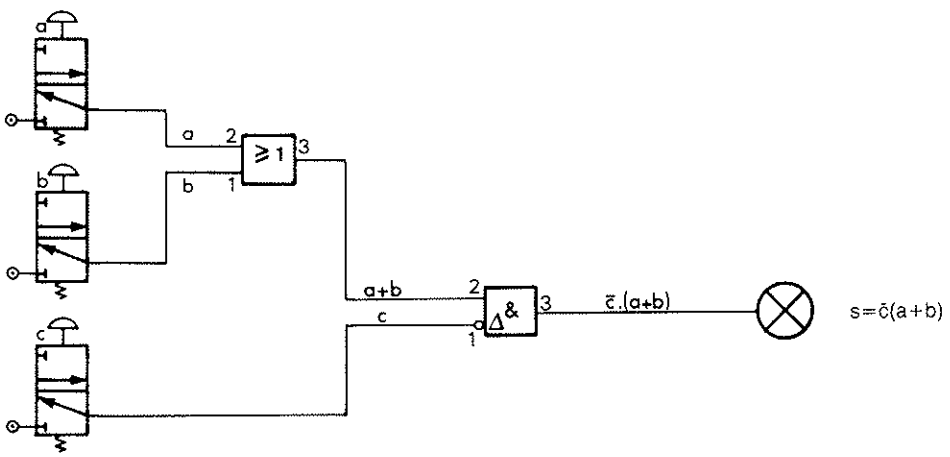

Writing the equation and drawing the diagram

EXERCISE : the indicator is on : it will go off when buttons a or b are pressed.

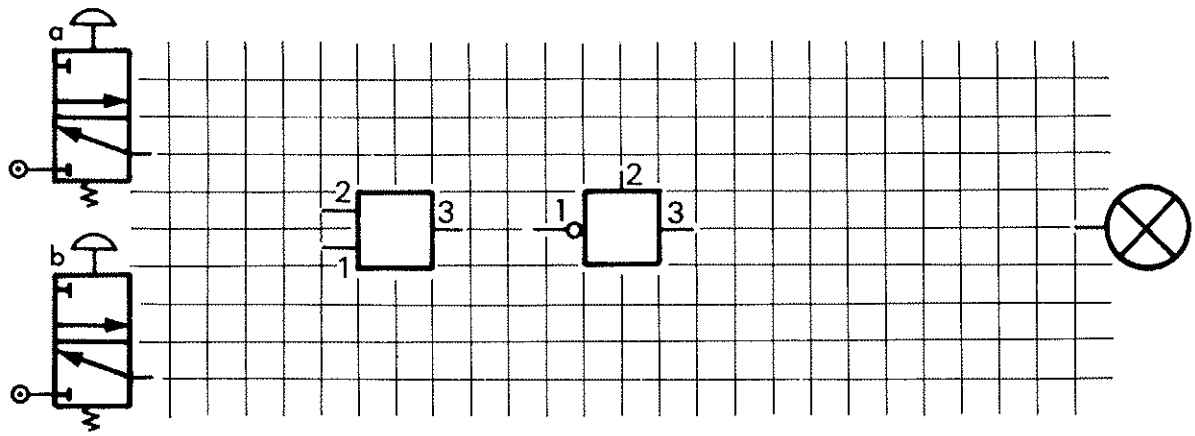

EXERCISE : the indicator is on : it will go off when buttons a and b are pressed.

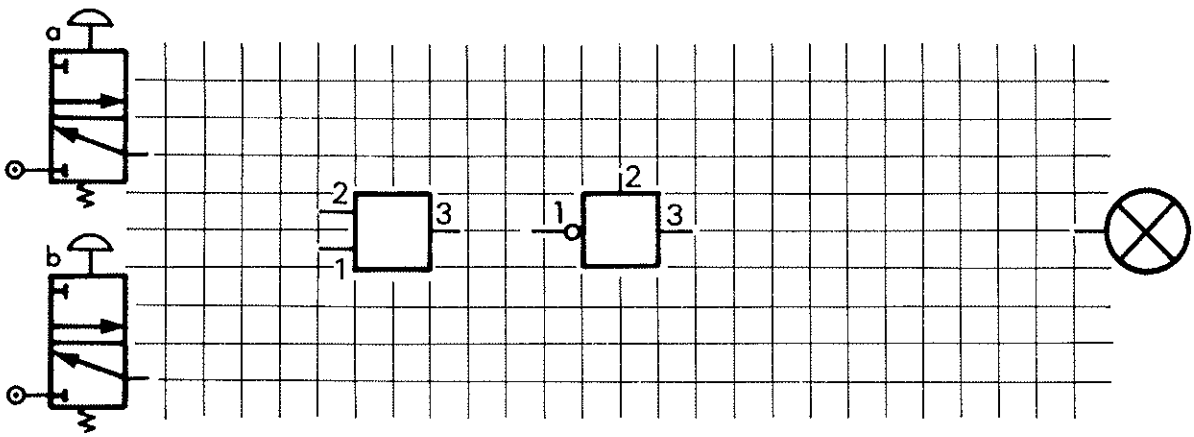

Transforming the equation and drawing the logical diagram

EXERCISE: s = a or (b and c) = a + (b.c)

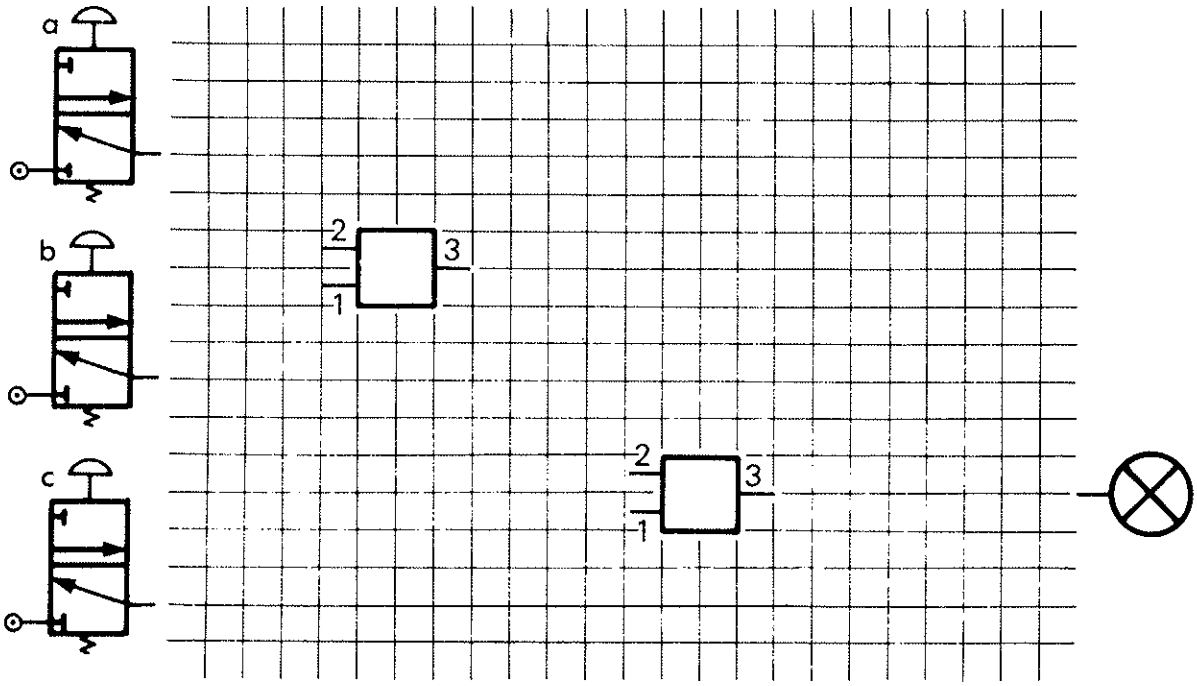

"MEMORY" FUNCTION

Symbol	Equation	Rest state
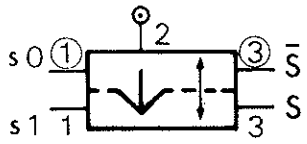	S0 = $\bar{S}$ S1 = S	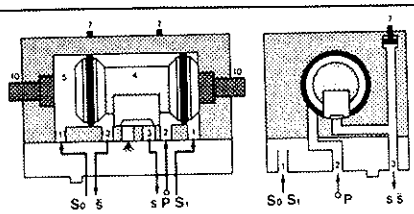

Colour:black

Example:

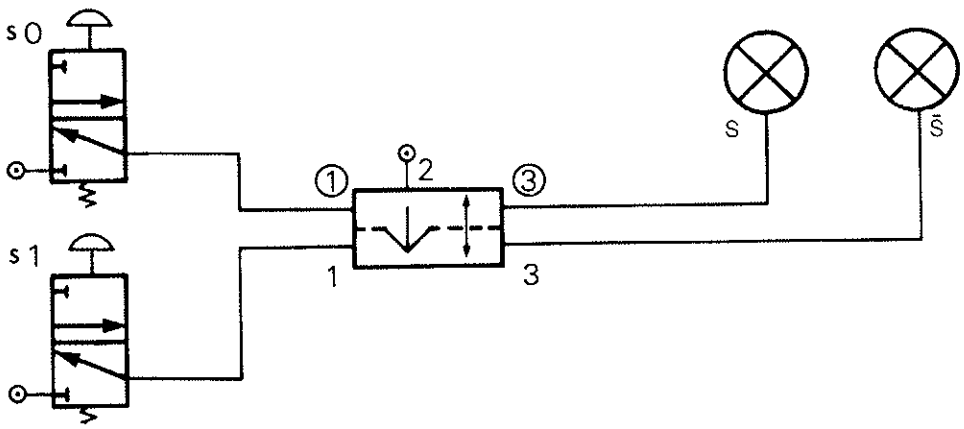

The appearance of signal "s1" causes the displacement of the spool, the output "$\bar{s}$" being put under pressure. This state is remembered until the arrival of signal "s0" which reverses the spool, the output "s" is now put under pressure and output "$\bar{s}$" is exhausted. The output "s" indicates that the information in the memory is "s0". The output "$\bar{s}$" indicates that the information in the memory is "s1".

Memory circuit with priority reset $S = \bar{a}(m + S)$

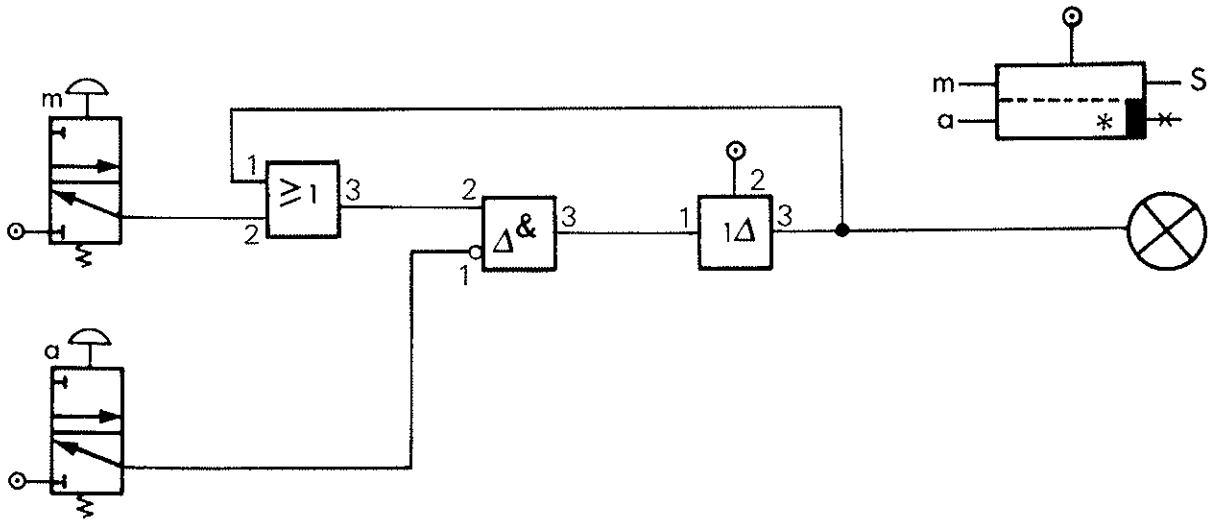

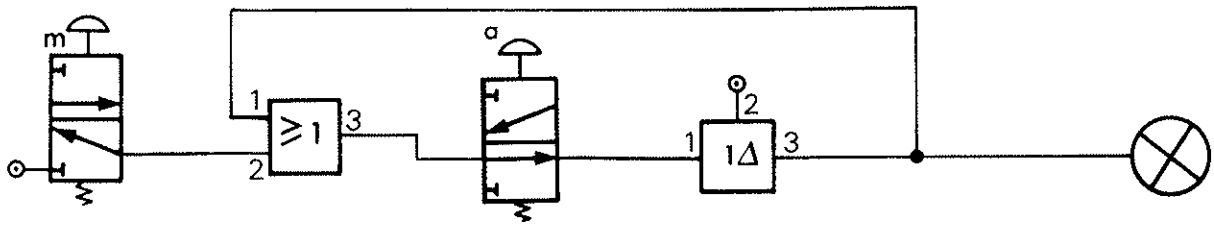

Memory circuit with priority start $S = m + S\bar{a}$

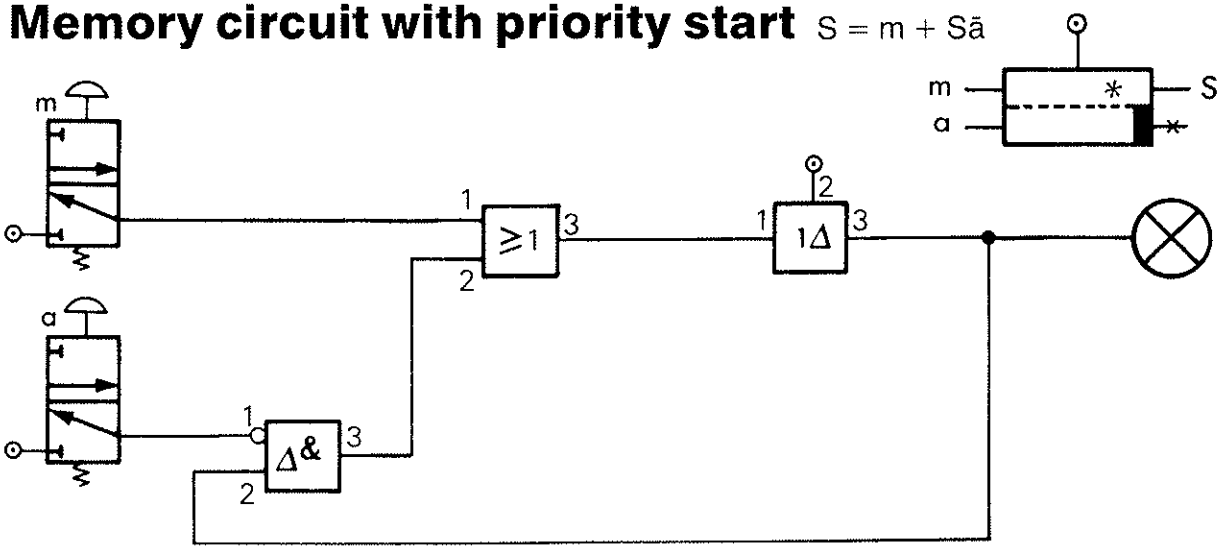

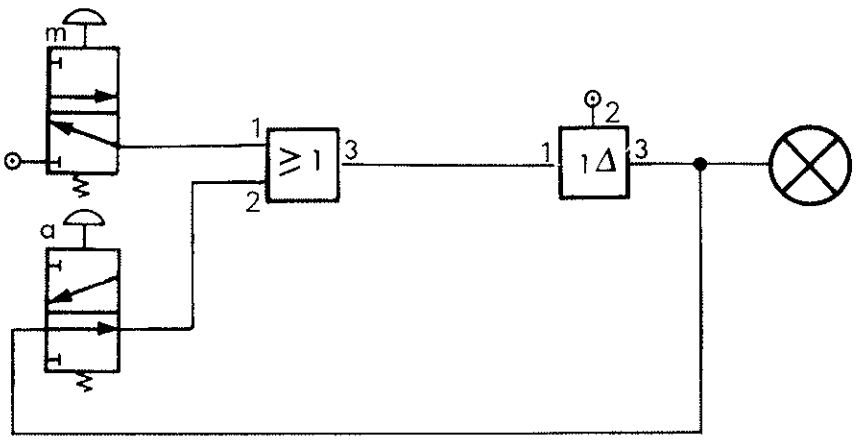

3 — PERIPHERAL COMPONENTS

— Relay cell normally closed

— Relay cell normally open

— Timer relay

— Impulse generator

— Frequency generator (oscillator)

— Bleed sensor relay

— Amplifier relay

— Proximity and Gap sensors

— Adjustable pressure sensor normally closed

— Adjustable pressure sensor normally open

— Vacuum generators, Venturi suction effect

— Adjustable vacuum sensor normally closed

— Two-handed safety module

— Pressure decay sensor

— Pneumatic sequencer

Relay cell normally closed

Symbol	Equation	Truth Table	Rest state
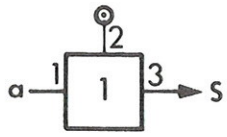	s = a		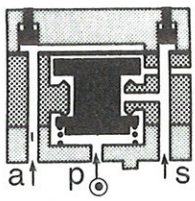

Colour:orange

Example:

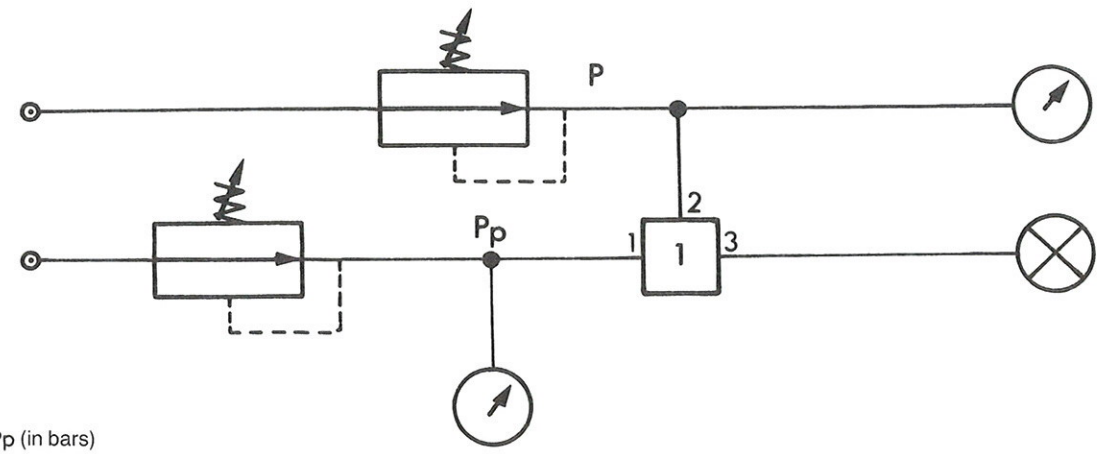

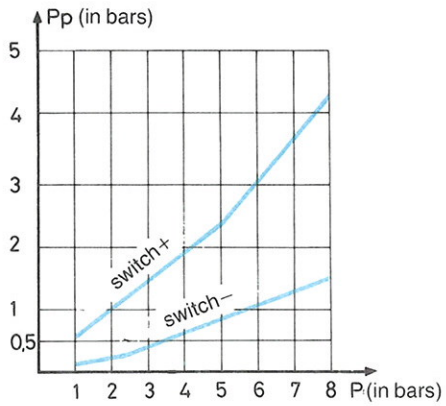

Switch + : the output signal appears.

Switch – : the output signal disappears.

Vary the supply pressure (P) and measure the control pressure (Pp). (Note an additional pressure regulator ref 81·527·001 and pressure gauge ref 81·530.001 will be required on the standard C2-20 kit). Compare the switch curves of the relay cell normally closed with those of a YES unit.

This device is most commonly used in normally closed timing devices.

Relay cell normally open

Symbol	Equation	Truth Table	Rest state
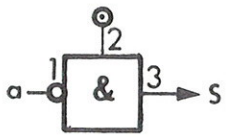	$s = \bar{a}$		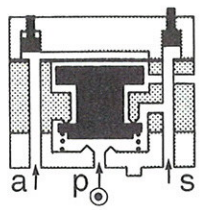

Colour:dark grey

Example:

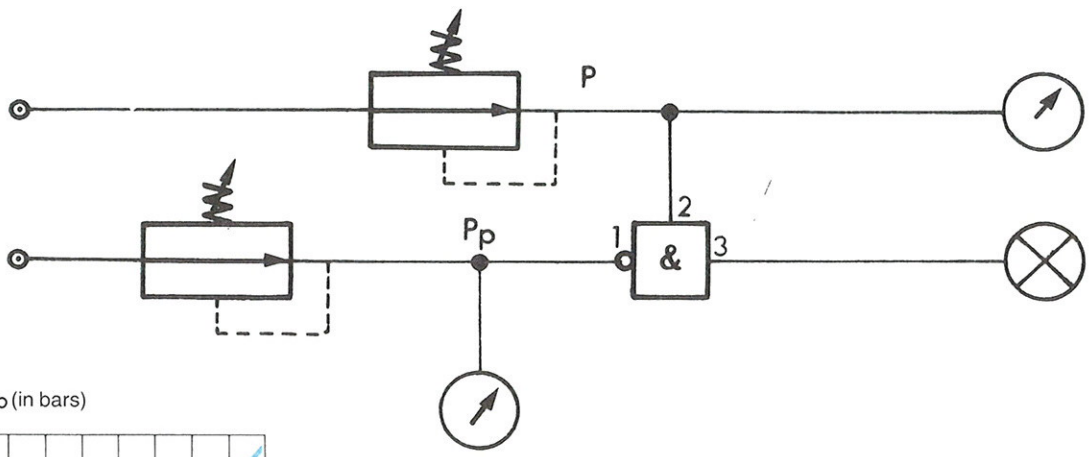

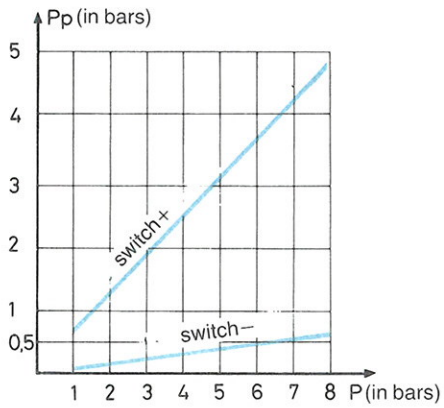

Switch + : the output signal disappears.

Switch − : the output signal appears.

Vary the supply pressure and measure the control pressure. Compare the switch curves of the relay cell normally open with those of a NOT unit.
Note: This unit is not supplied on the C2-20.
This device is most commonly used in normally open timing devices.

Timer relay

It may be necessary to delay the appearance or disappearance of an output signal in relation to the appearance of the input signal; timer relays are used to perform this function.

— The operating principle of these pneumatic relays is similar to that of electronic delay systems (resistor capacity circuit).

Time delay by charging

Example:

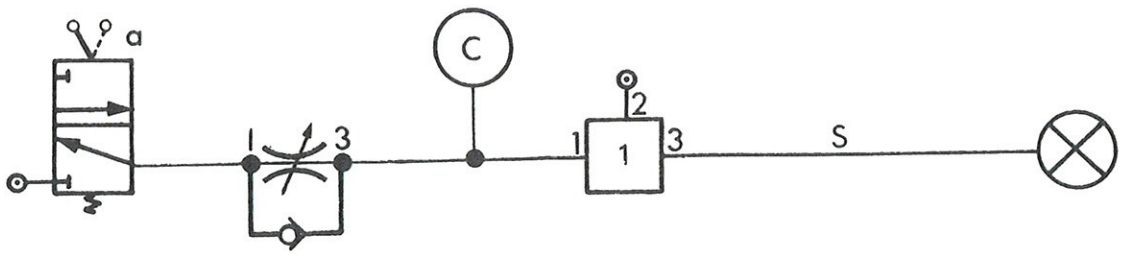

The capacity is filled via the flow restrictor until the switch threshold of the relay cell (NC or NO) is reached. The non-return device enables the capacity to be drained quickly to re-set the time delay.

Function:

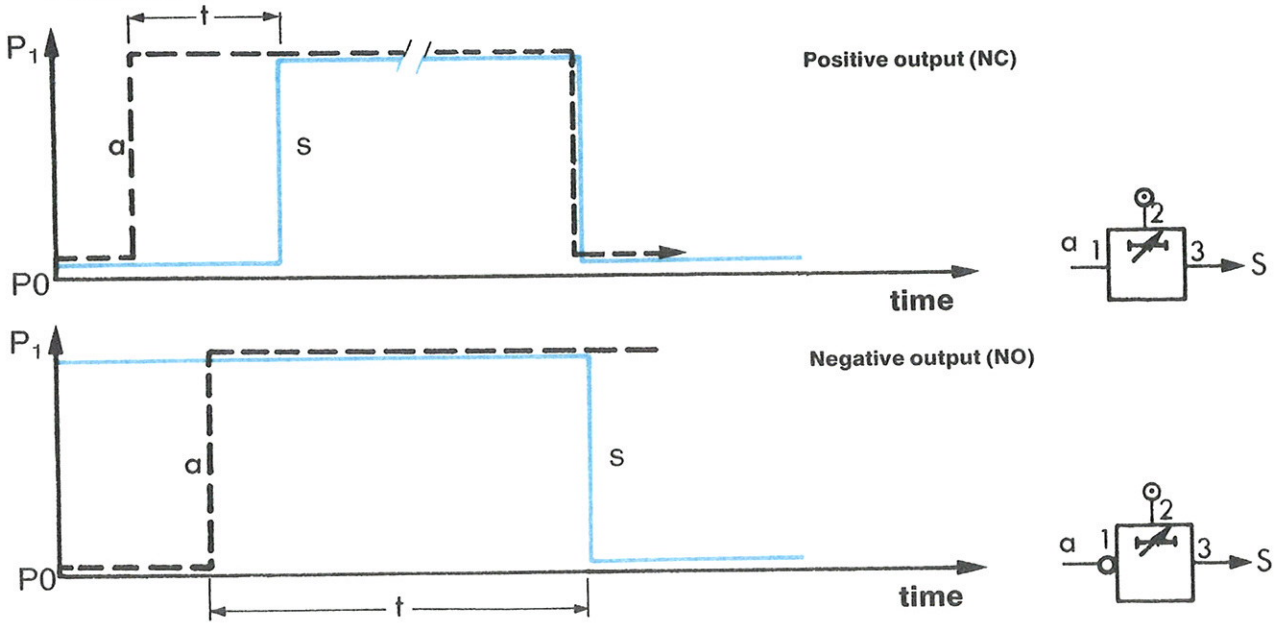

The relay cells (NC or NO) were designed for delay timing functions.

Time delay by exhausting

Example:

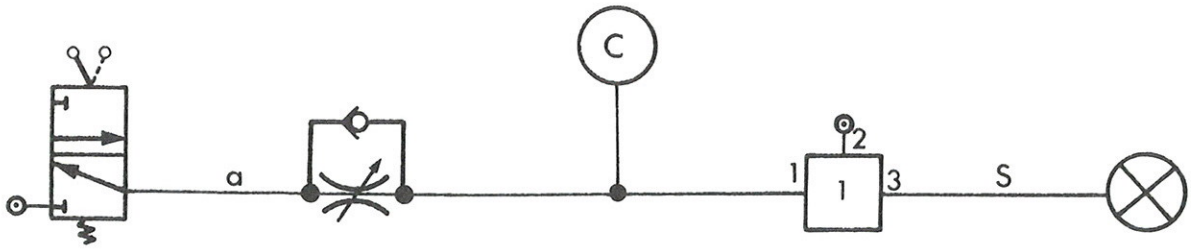

The capacity is drained via the flow restrictor until the switch threshold of the relay cell (NC or NO) is reached.

Function:

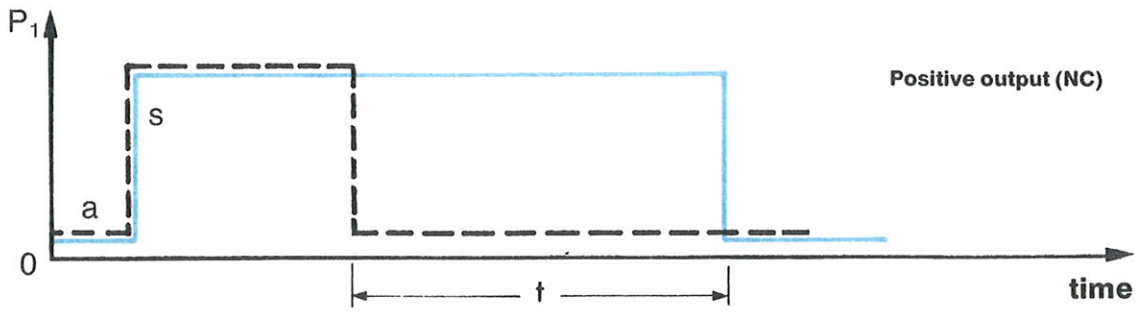

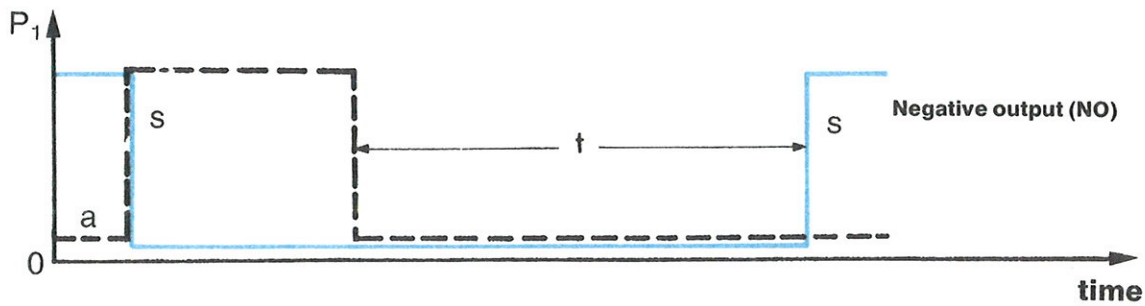

Time delay by charging (single block)

Fixed delay N.C.

* In these relays the flow restrictor is replaced by a calibrated orifice to give a fixed time delay 0.4 secs.

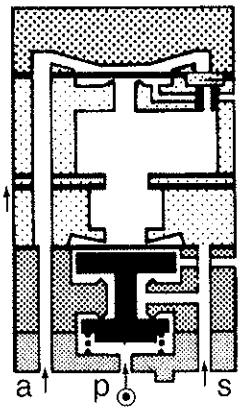

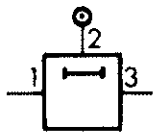

Adjustable delay N.C.

Adjustment is via a screw. The capacity is fixed; it is the air flow for capacity filling that can be varied, 2 types: 0 to 10 sec or 0 to 30 sec.

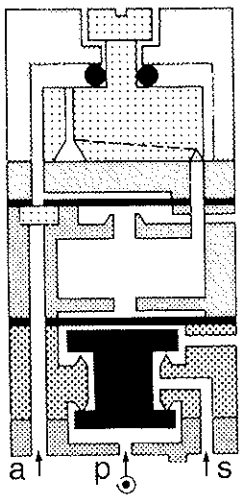

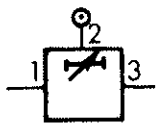

Example:

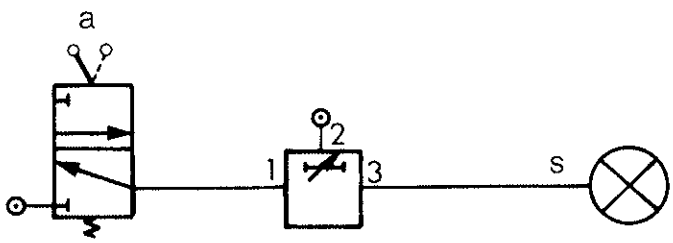

Impulse generator

The objective is to transform a maintained control signal into a fixed or adjustable period pulse. Resetting (draining) must take place before a new pulse is taken into account.

Example:

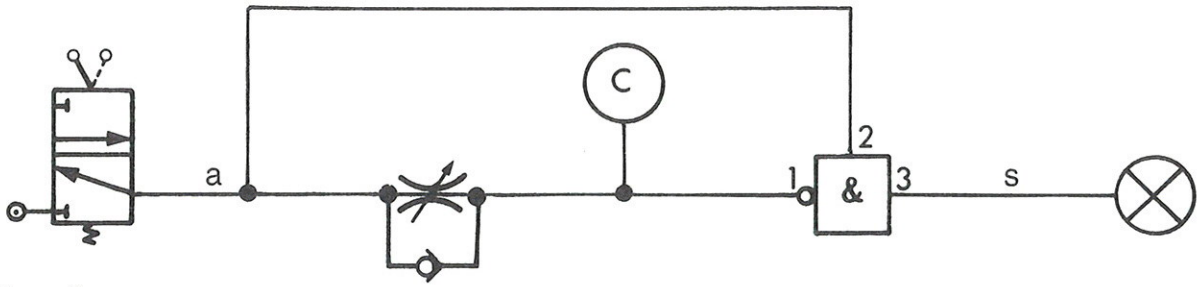

Function:

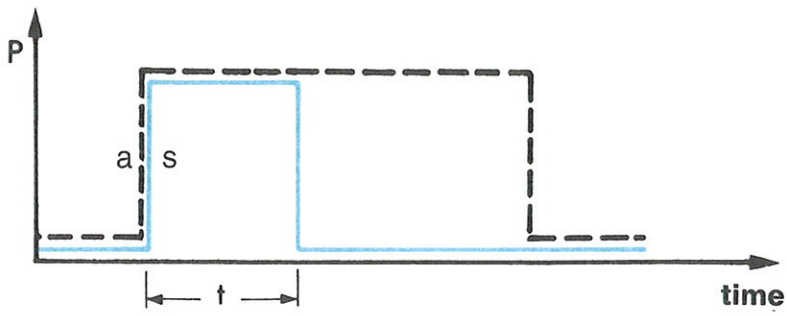

Impulse generator
4/10ths sec

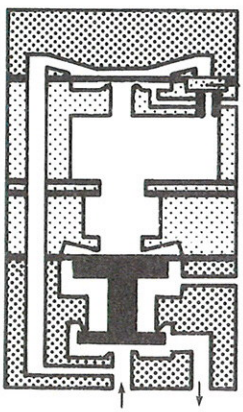

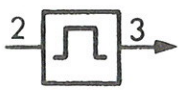

Adjustable impulse generator
0 to 30 sec.

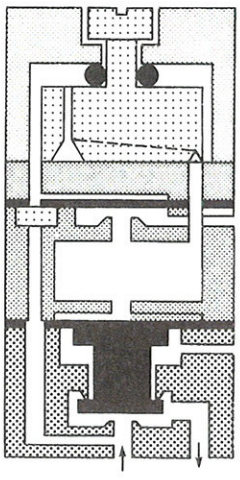

Example:
How can a signal lasting 20 seconds be obtained from a 5/10ths second pulse.

1st solution

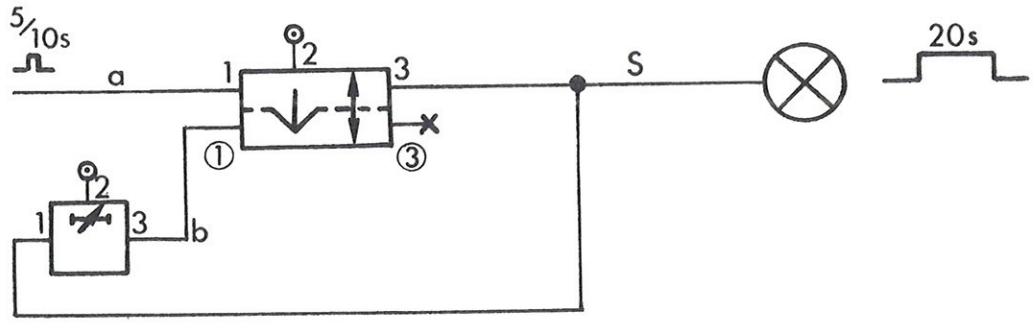

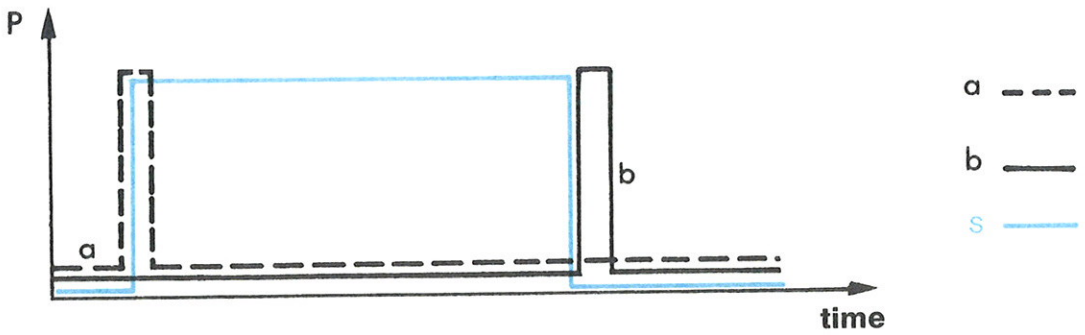

2nd solution

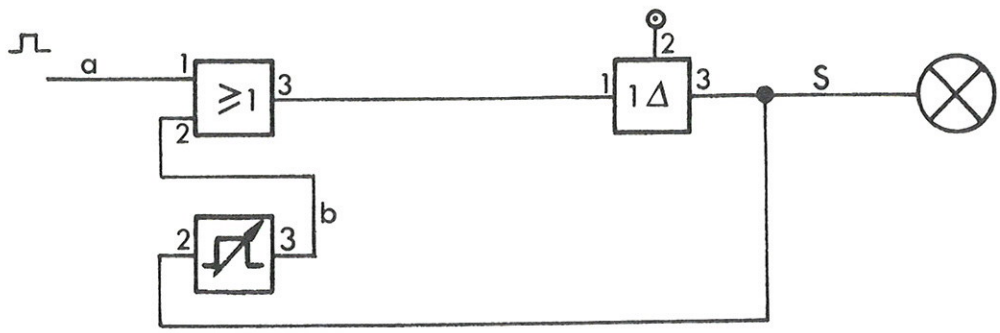

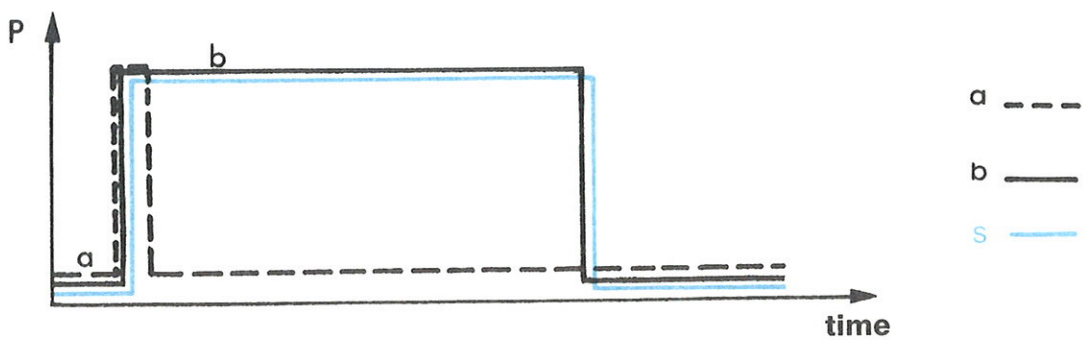

Frequency generator (oscillator)

The frequency generator supplied with a permanent signal delivers pulses at adjustable frequencies.

Old symbol

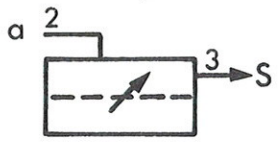

New symbol

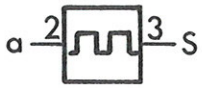

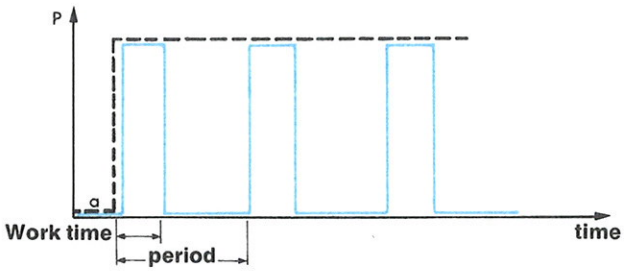

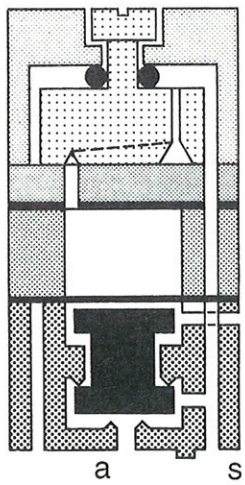

A time period is adjustable from; 0.02 Hz to 8 Hz.

The relationship will always be: $\frac{\text{on time}}{\text{total cycle time}} = \text{Constant} = \frac{1}{3}$

Example:

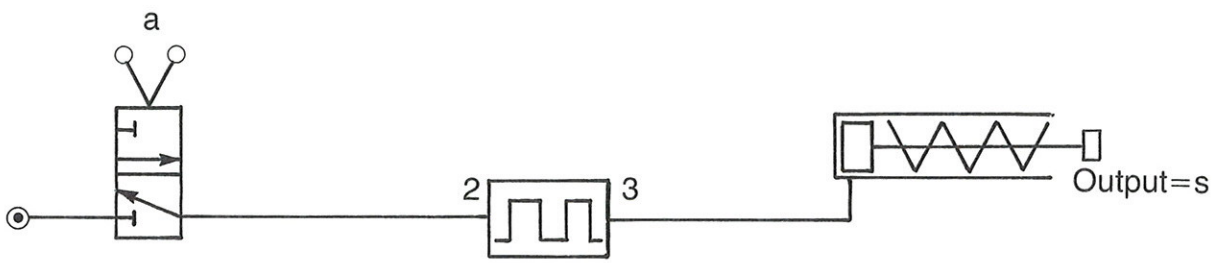

The on time and rest time can be varied.

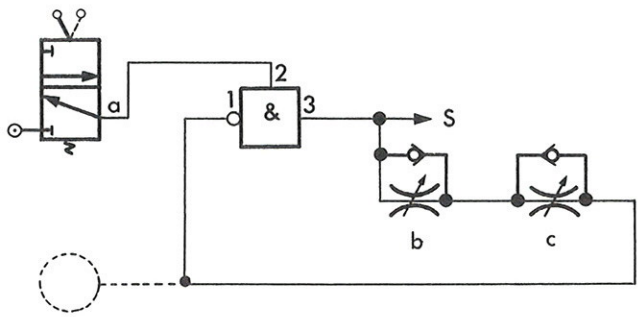

Bleed sensor relay

The bleed sensor relay supplies a low pressure bleed to the sensing device (bleed or leak sensor). When the orifice of the bleed sensor is blocked by the object which is being detected, the relay switches on output signal "s". This output is the same pressure as the supply to the relay.

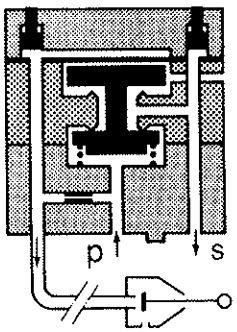

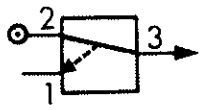

Example:

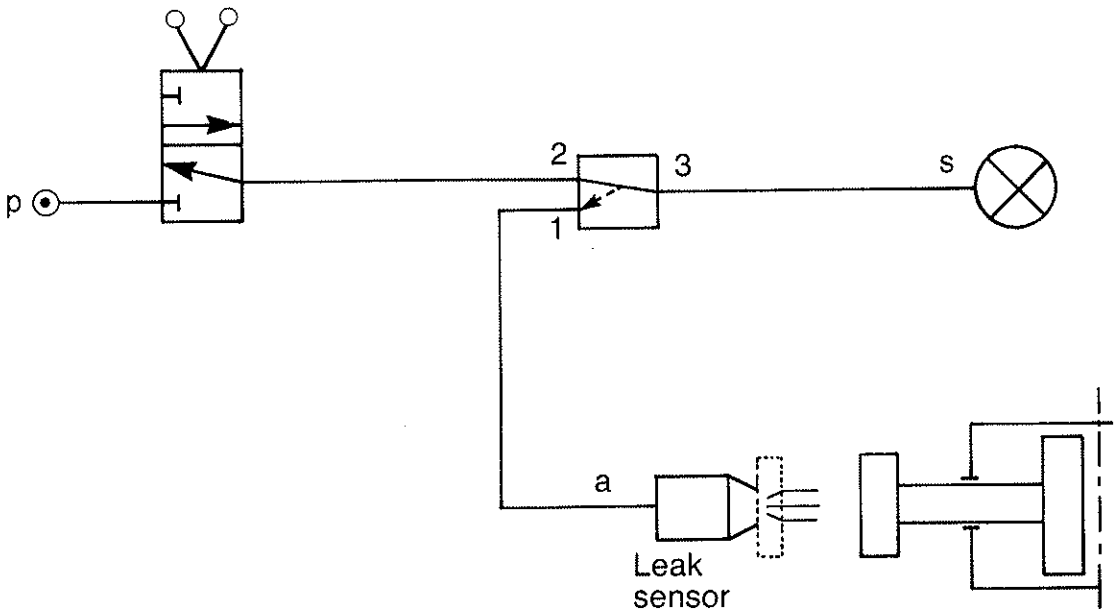

Amplifier relay

The amplifier relay enables a high pressure output signal to be obtained from a low pressure input signal. It is frequently used in conjunction with pneumatic gap sensors and proximity sensors.

Amplifiers:

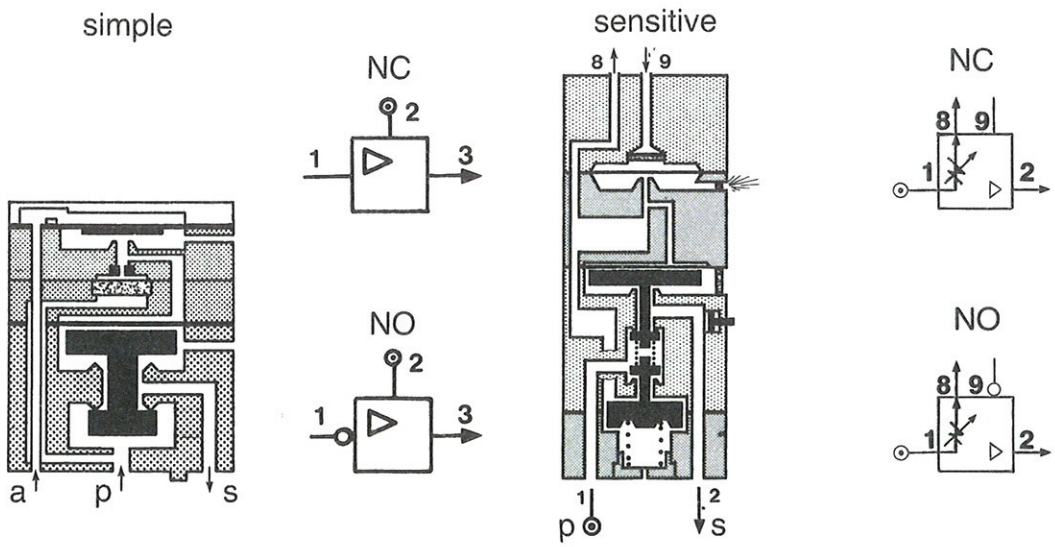

The unit can be normally closed or normally open.

The sensitive relay is designed to supply the pneumatic sensor via an inbuilt pressure regulator. This prevents unnecessary air loss at the sensor.
Example: see pages 36, 37 & 38.

Switching Characteristics

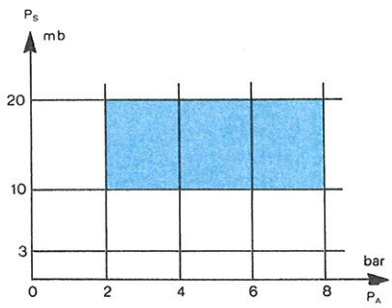

P_A = Supply pressure
P_S = Pilot pressure

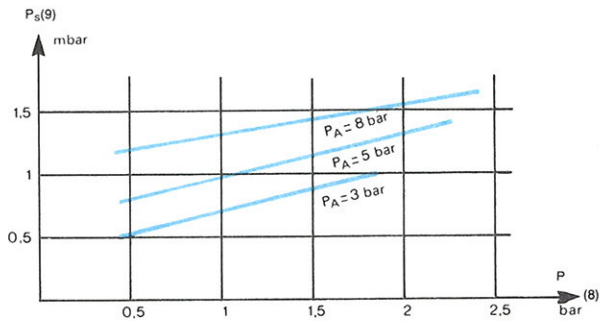

P_A = Supply pressure to amplifier
P = Supply from amplifier to sensor (8)
P_S = Pilot signal from sensor (9)

Proximity sensors

This type of sensor is used to detect the presence of a component without actually making contact with it. It is used in conjunction with a sensitive amplifier.

Rest Position

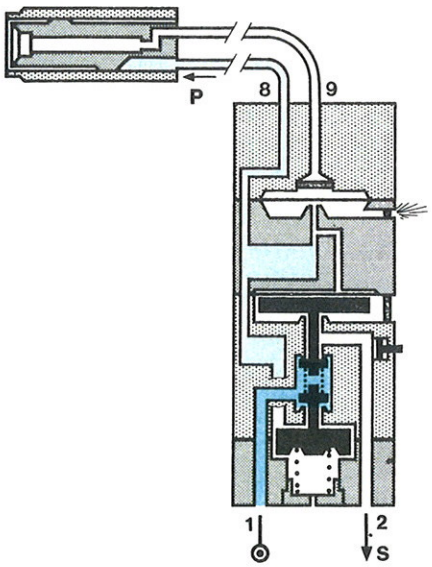

Operated Position

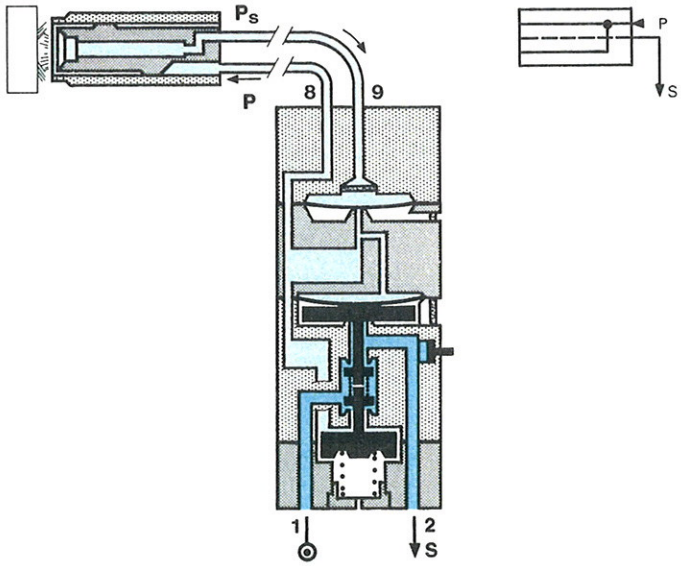

The amplifier supplies air to the sensor and an air jet is formed at the sensing face. When a component is present the air jet is disturbed and a low pressure signal is created at the centre of the sensor. This signal is fed to the amplifier.

ø 6mm sensor

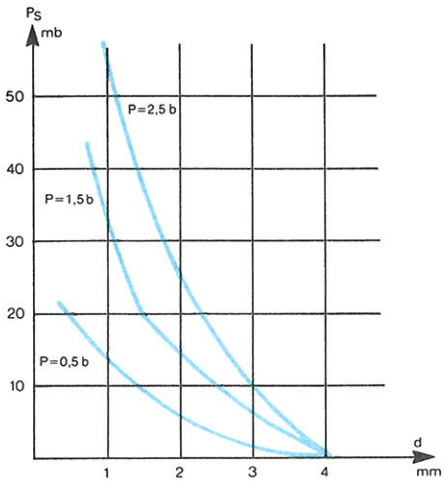

ø 12mm sensor

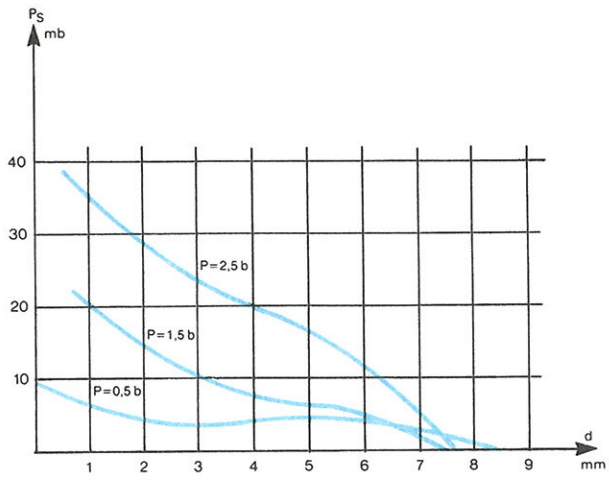

Gap sensors

This type of sensor is used to sense the presence of a component without mechanical contact and where it is not possible to mount the sensor in close proximity to the component.
They are comprised of an emitter and a receiver.

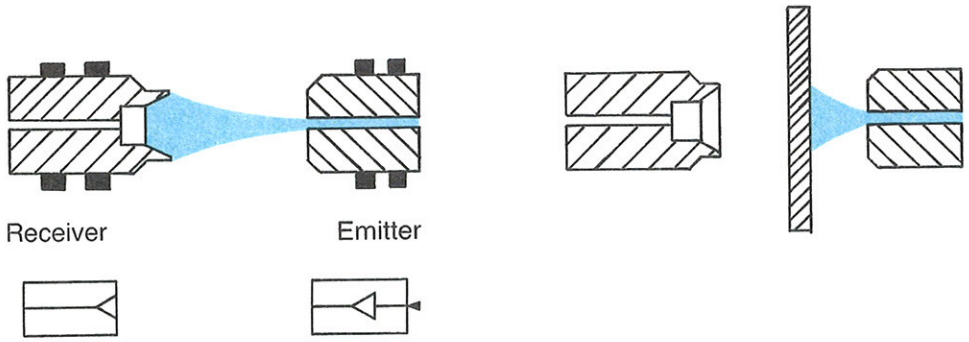

The detector enables the detection of a component by the interruption of an air jet.

Example:
Single unit version: detection 0 to 18mm.

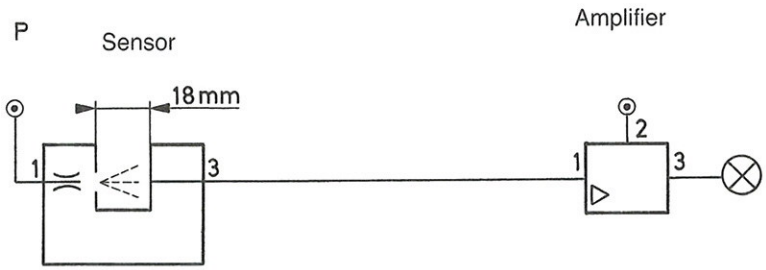

Note: A simple amplifier can be used in conjunction with the gap sensor for a sensing distance up to 25mm.

Separated version: detection range 0-100mm

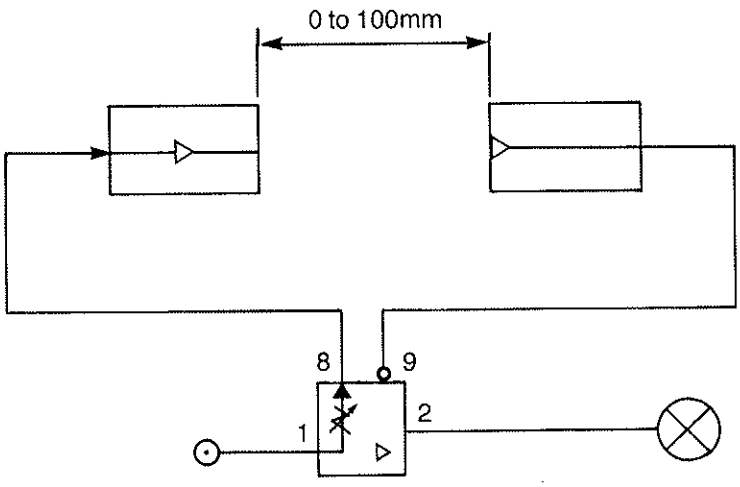

Important: To obtain a signal when a component crosses the gap, use a negative output amplifier.

The detection range can be increased by using a single unit detector and an emitter.

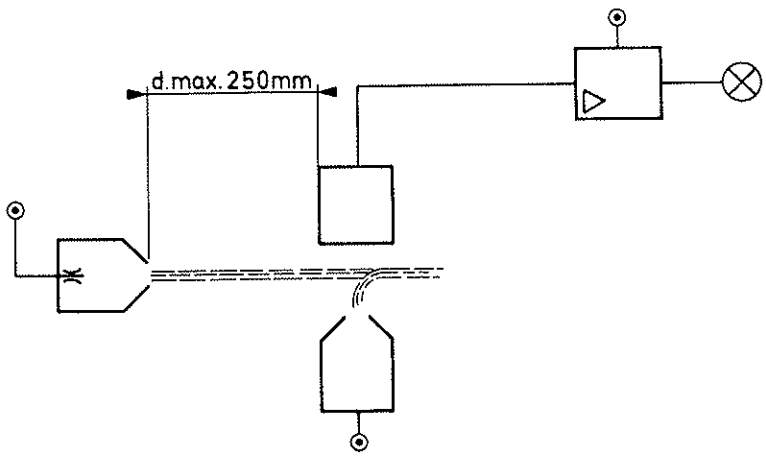

Adjustable Pressure Sensor

Normally Closed

Adjustable pressure sensors switch the output when the input signal reaches a predetermined and pre-adjusted pressure level.

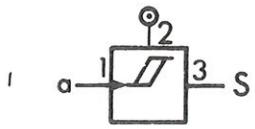

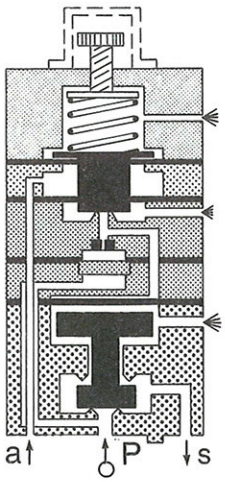

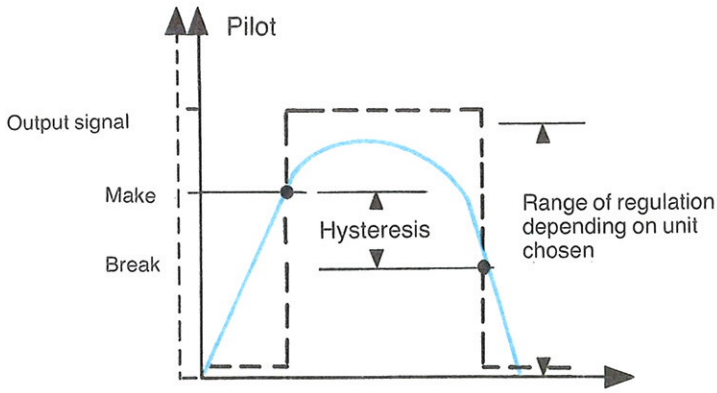

Example:

Setting

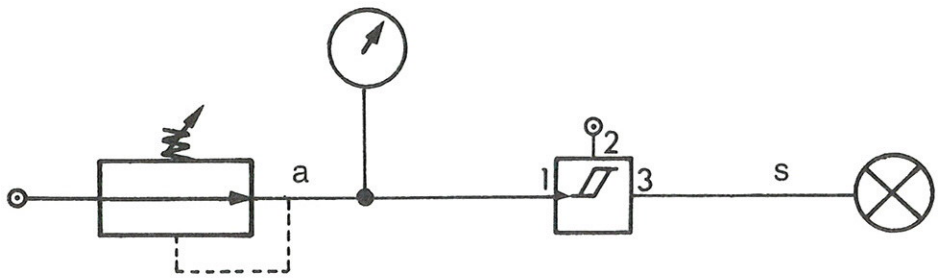

Set the control pressure and adjust the pressure sensor until the output changes state.

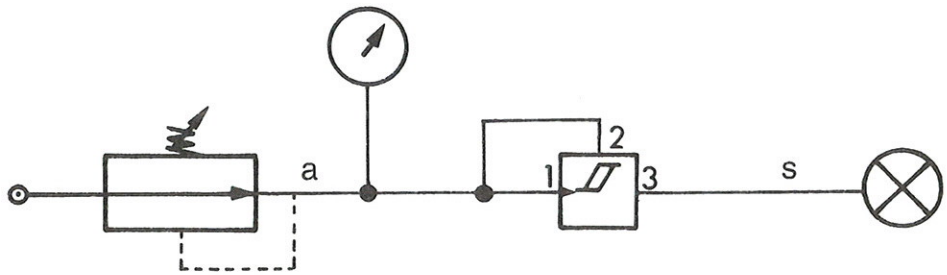

The input pressure is adjusted via a regulator and an output signal will be obtained for the input pressure set.

Adjustable Pressure Sensor

Normally Open

The pressure sequence valves switch the output when the control signal falls below a predetermined and pre-adjusted pressure level.

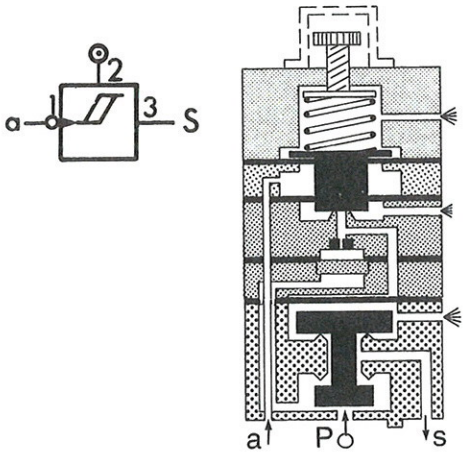

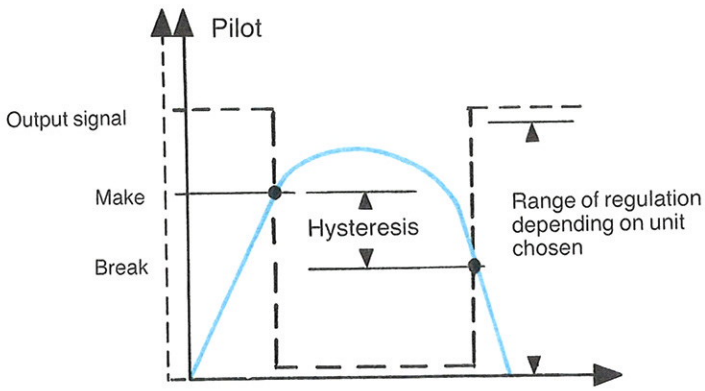

Example:
Setting the pressure level

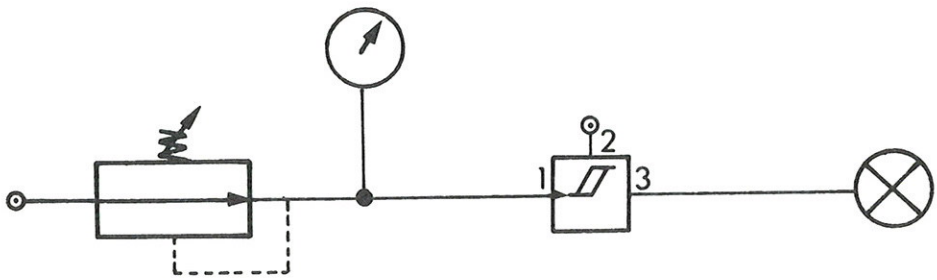

Set the control pressure and adjust the pressure sensor until the output changes state.

Vacuum generators, Venturi suction effect

The vacuum generator is used to create a suction effect on application of a pressure.
Sub-base mounted version (81·535·301)

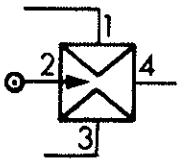

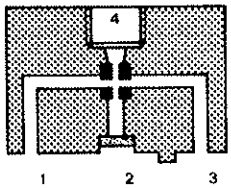

plug-in version (81·545·001)

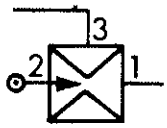

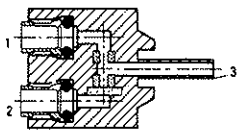

When coupled with a suction pad, the vacuum generator is used to handle non-porous parts.
By blocking the exhaust port (port 4 of the sub-base mounted model, port 1 for the plug-in model) a back-pressure is created which cancels the Venturi suction effect resulting in blow-out (on ports 1 and 3 for the sub-base mounted model and port 3 on the plug-in model).

Example:

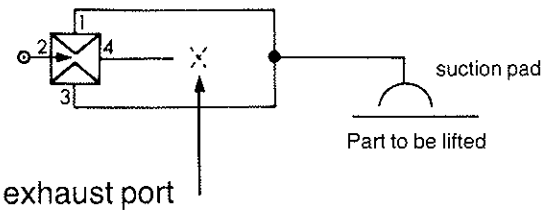

Possibility of blocking the exhaust port

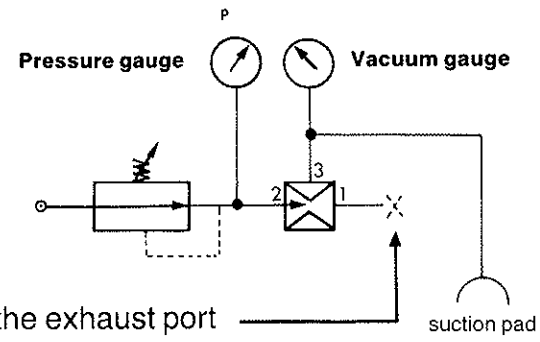

Possibility of blocking the exhaust port

Vary the supply pressure and check the negative pressure on the vacuum gauge.
(Note an additional vacuum gauge ref 81.530.101 will be required on the standard C2-20).

ref 81.535.301, 81.545.001

Adjustable vacuum sensor

Normally Closed

The vacuum sensor will switch an output when the input signal reaches a predetermined and pre-adjusted level of vacuum.

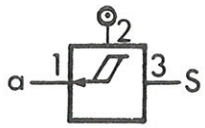

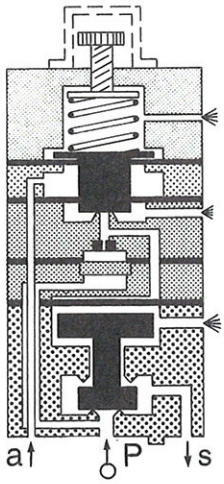

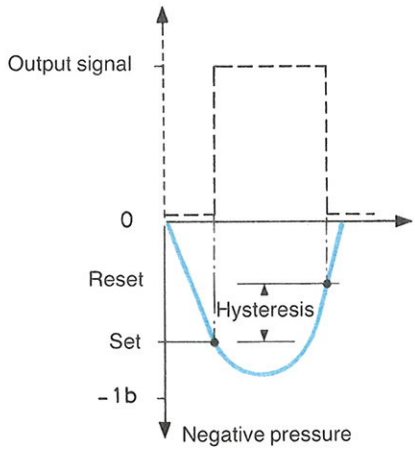

Example:
An output signal is required to tell us that a particular level of vacuum has been reached before the part can be lifted.

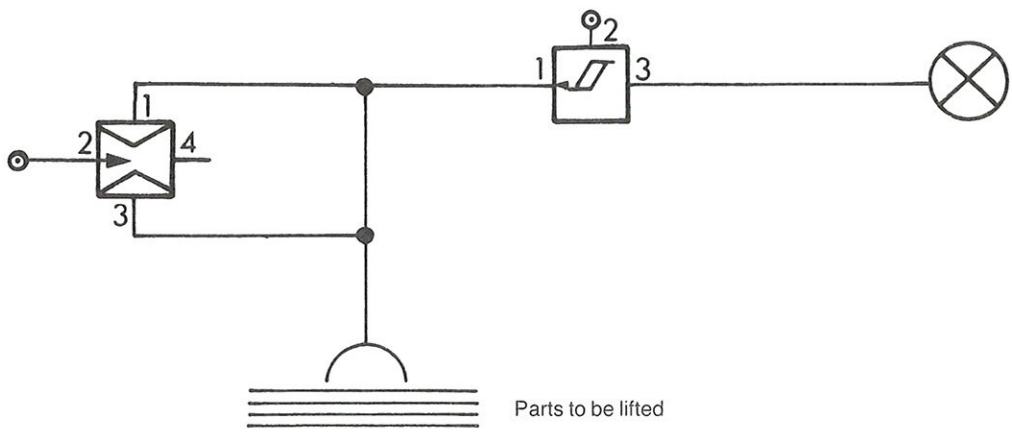

By blocking port 4 the suction pad will blow out and the port will be released.

Two-handed safety module

This device is used to ensure operator safety during a dangerous machine movement, cycle or phase. To obtain an output signal it is necessary to give two simultaneous input signals "a" and "b" with a maximum delay of 0.4s. The output is only maintained if the 2 input signals are present. It cannot reappear until both buttons have been released and reoperated.

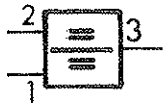

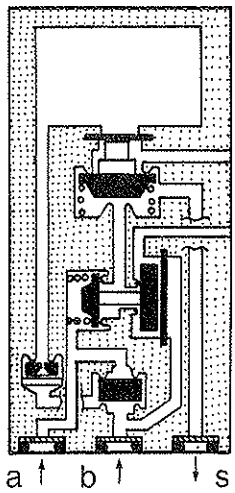

Example:
Control of a spring return control valve.

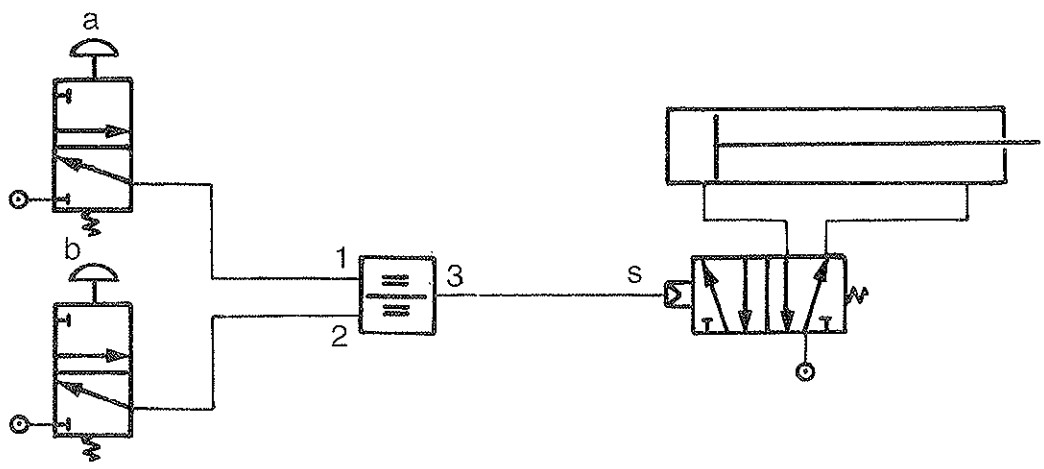

Example:
Two Handed Safety Control Circuit

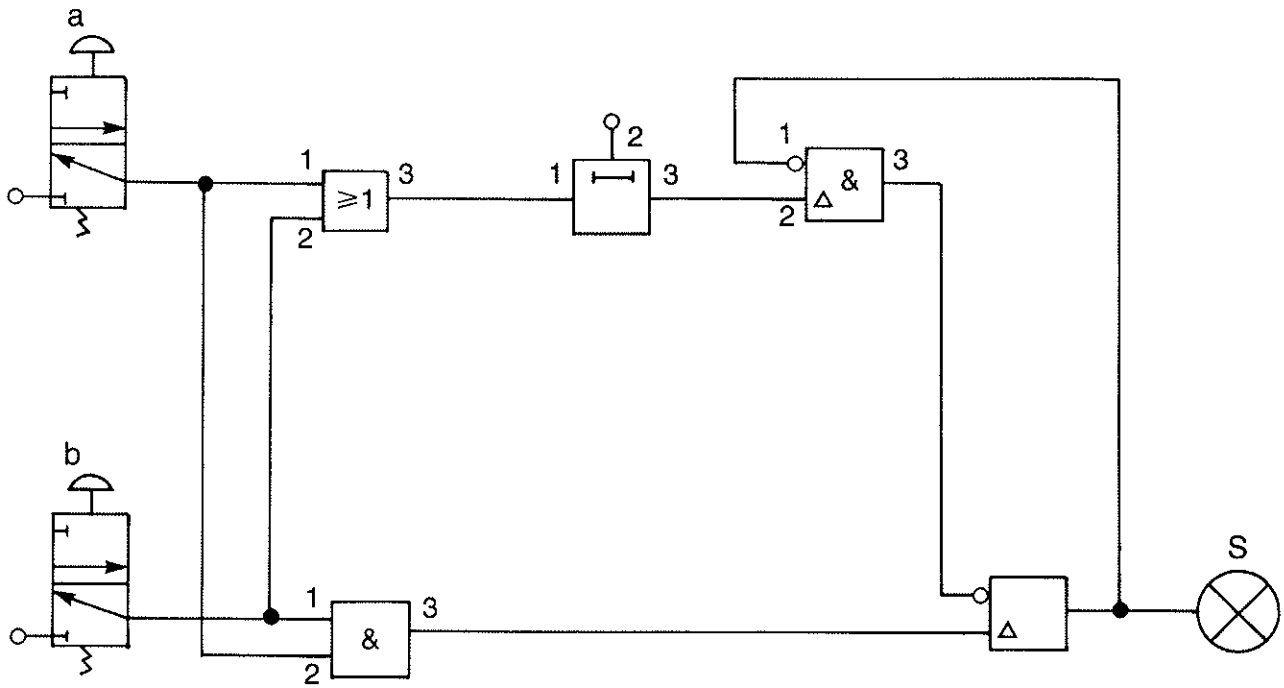

Pressure decay sensor

(NOT cell)

This non-contact sensor delivers a signal at the end of a cylinder movement using the pressure levels in the cylinder.
See the operating and connection diagrams below.

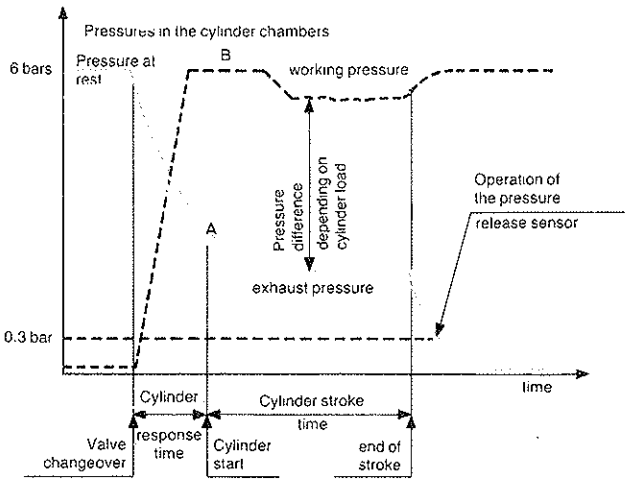

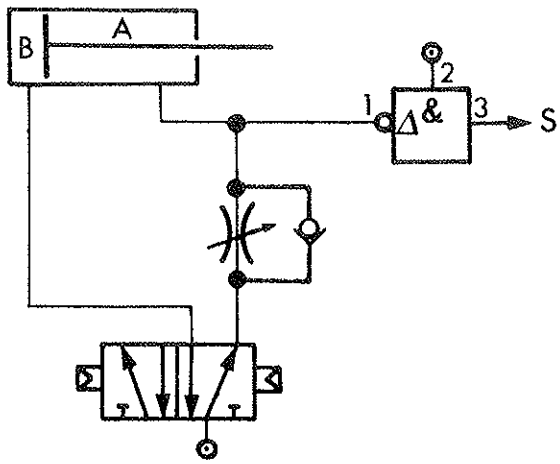

Example:
Important: if a flow controller is being used, connect the sensor between the flow controller and the cylinder chamber.

Caution: Do not use pressure decay sensors on cylinders whose load rate is greater than 60% of the rated load. If this should be the case then use the system shown below.

The sensor will only deliver its data if the front chamber is drained and when the piston has reached end of stroke.

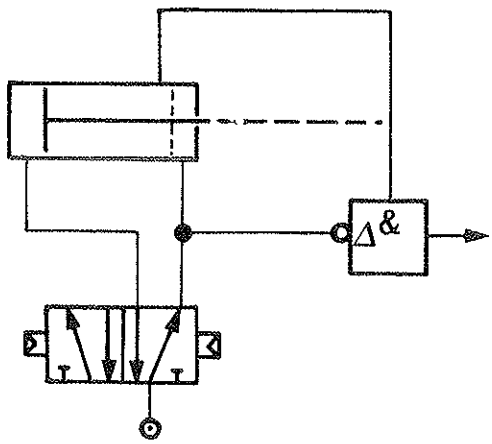

4

4 — PNEUMATIC SEQUENCER

— Learning to program the pnematic sequencer

— Listing the cylinder sequence

— Transferring the cylinder sequence to the circuit diagram

— Completing the sequencer circuit

— Different modes of operation

— Changing the function of a sequencer

Crouzet®

Pneumatic Sequencer

The Pneumatic Sequencer is used in any pneumatic circuit that requires step-by-step operation and feedback signals after each step to ensure safe operation.

Each sequence module comprises of:
1 — Memory function
1 — And function (interchangeable with other elements see page 56)
1 — Or function

There are two types of sequence module
— Maintained memory, in the event of an air supply failure
— Auto-reset memory, in the event of an air supply failure

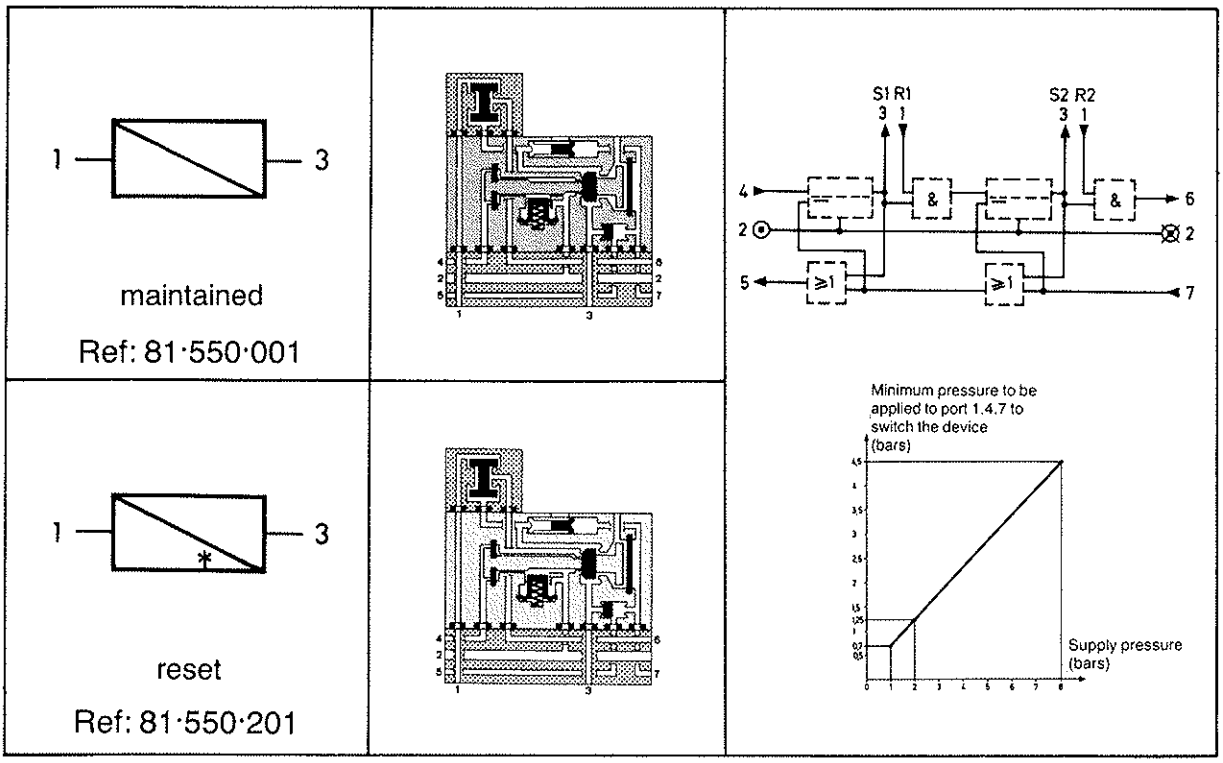

Learning to program the pneumatic sequencer

1. Label each air cylinder with a letter of the alphabet starting with the letter "A".

2. Label the Double Pilot Operated Control Valve that operates the cylinder with the same letter as the cylinder.

3. Label the pilot of the Control Valve that extends the cylinder with a "+" symbol.

4. Label the pilot of the Control Valve that retracts the cylinder with a "−" symbol.

5. Label the Air Switch that the Cylinder Piston Rod strikes when it is in the retracted position with the letter of the cylinder plus the number "0".

6. Label the Air Switch that the Piston Rod strikes when it is in the extended position with the letter of the cylinder plus the number "1".

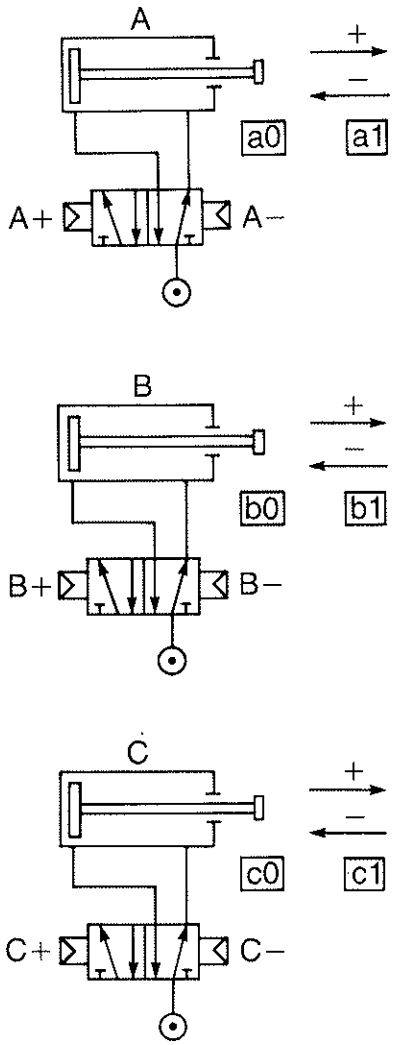

The Cycle Sequence can now be expressed as: A+, B+, C+, C−, B−, A−

Listing the Cylinder Sequence

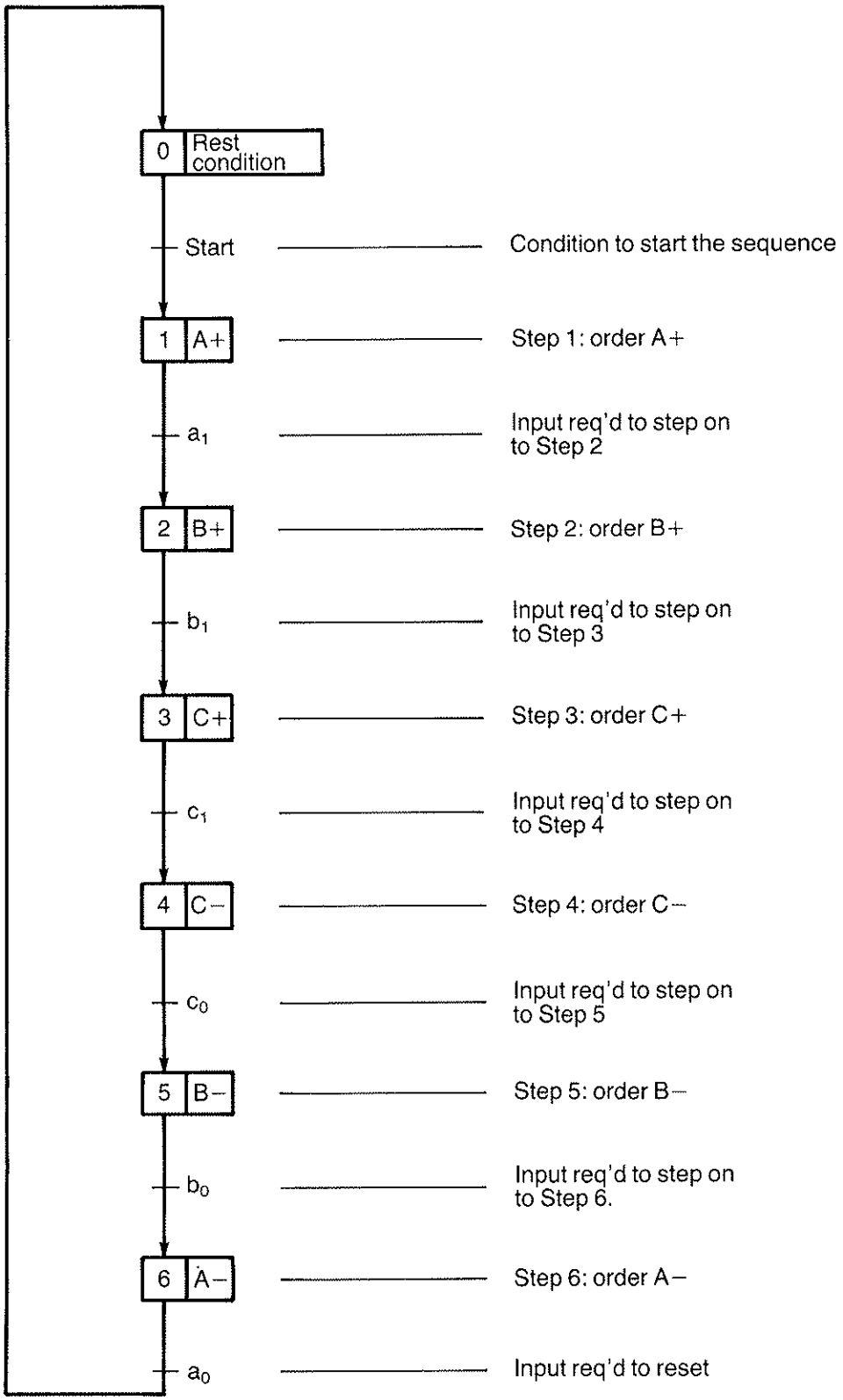

Transferring the Cylinder Sequence to the Circuit Diagram

One Sequence Module is required for each step in the Cylinder Sequence. An "And" element should be assembled on top of each module.

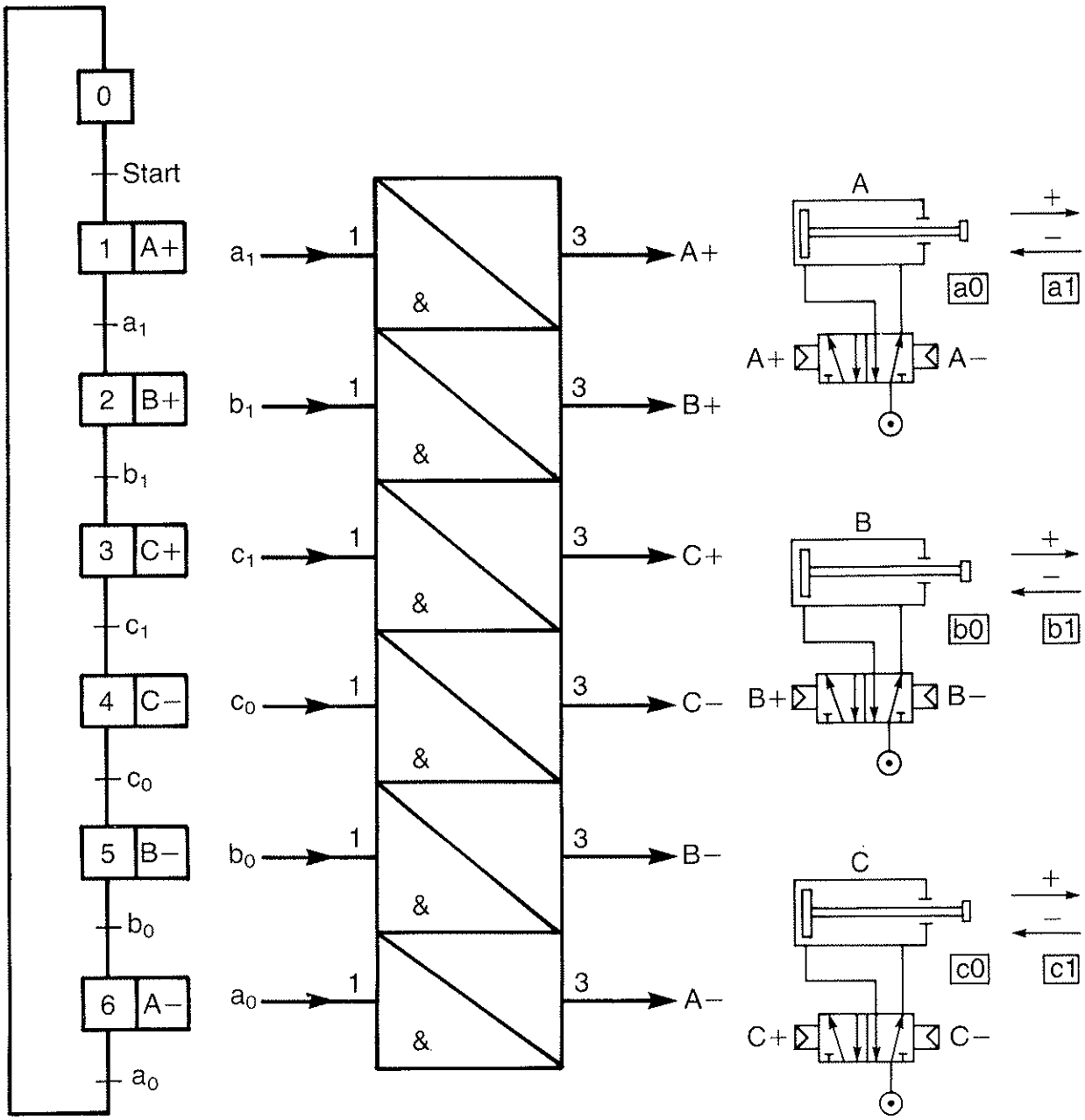

Completing the Sequencer Circuit

1. Connect start signal to input port 4.
2. Connect air supply to port 2.
3. Connect port 5 to an indicator for in cycle indication. (This may be plugged if indication is not req'd).

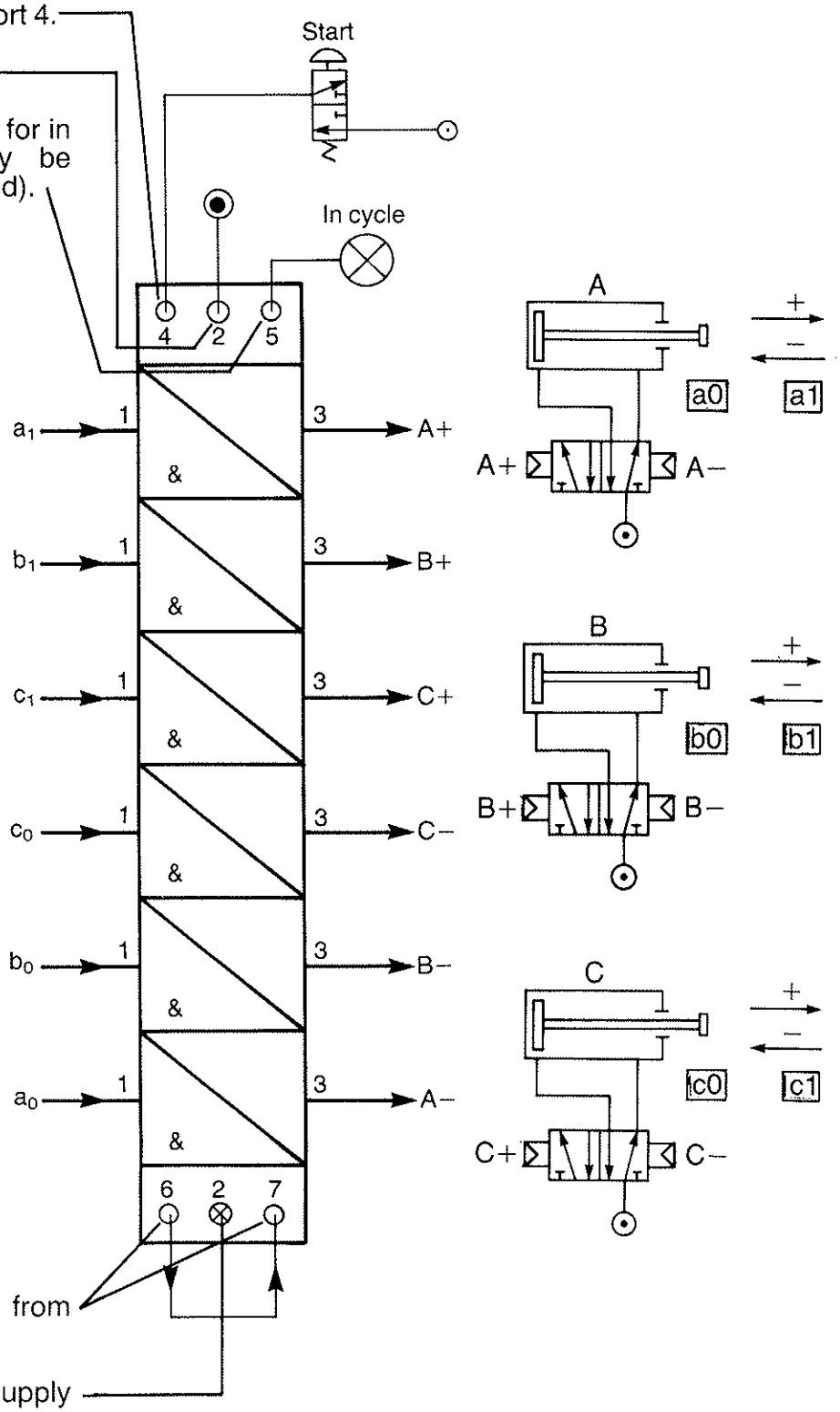

4. Connect end of cycle signal from port 6 to reset, port 7.
5. Plug port 2 or connect to air supply to complete ring main system.

Different modes of operation

Automatic Operation

A two position switch is used to start the cycle in continuous operation. The cycle will repeat automatically without the intervention of the operator.

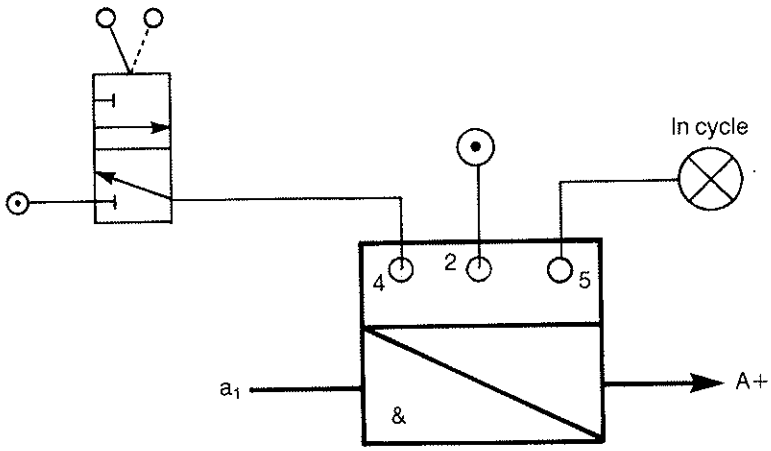

Single cycle or Automatic operation

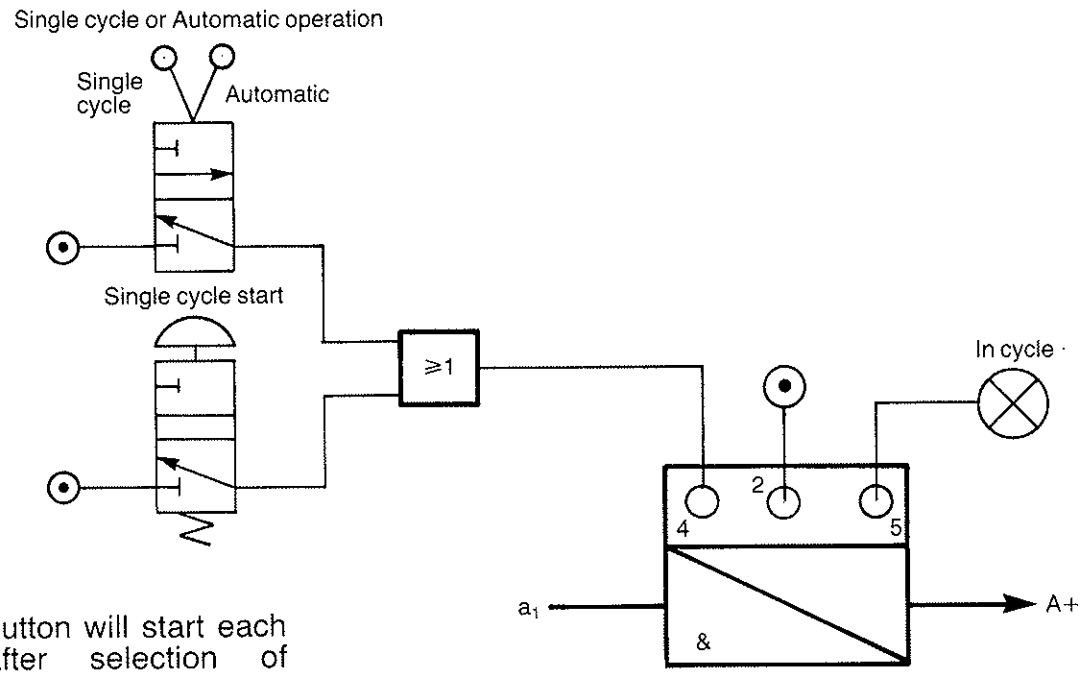

A push button will start each cycle after selection of "single cycle". In the automatic position the operation is as the previous example.

Different modes of operation

External reset

An OR element connected to port 7 enables the sequencer to be reset to zero. (Note, this will not reset outputs from the sequencer).

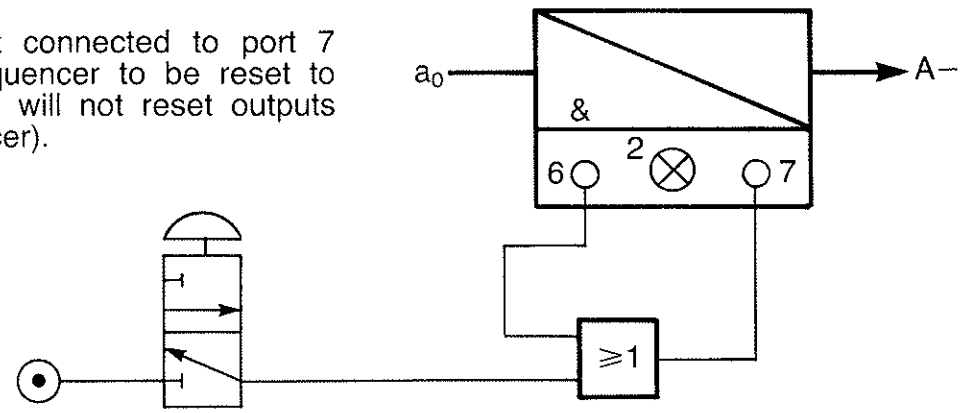

External reset of sequencer and outputs

The OR elements, on the outputs of the modules (A−,B−,C−) enable the simultaneous return of the cylinders A,B,&C

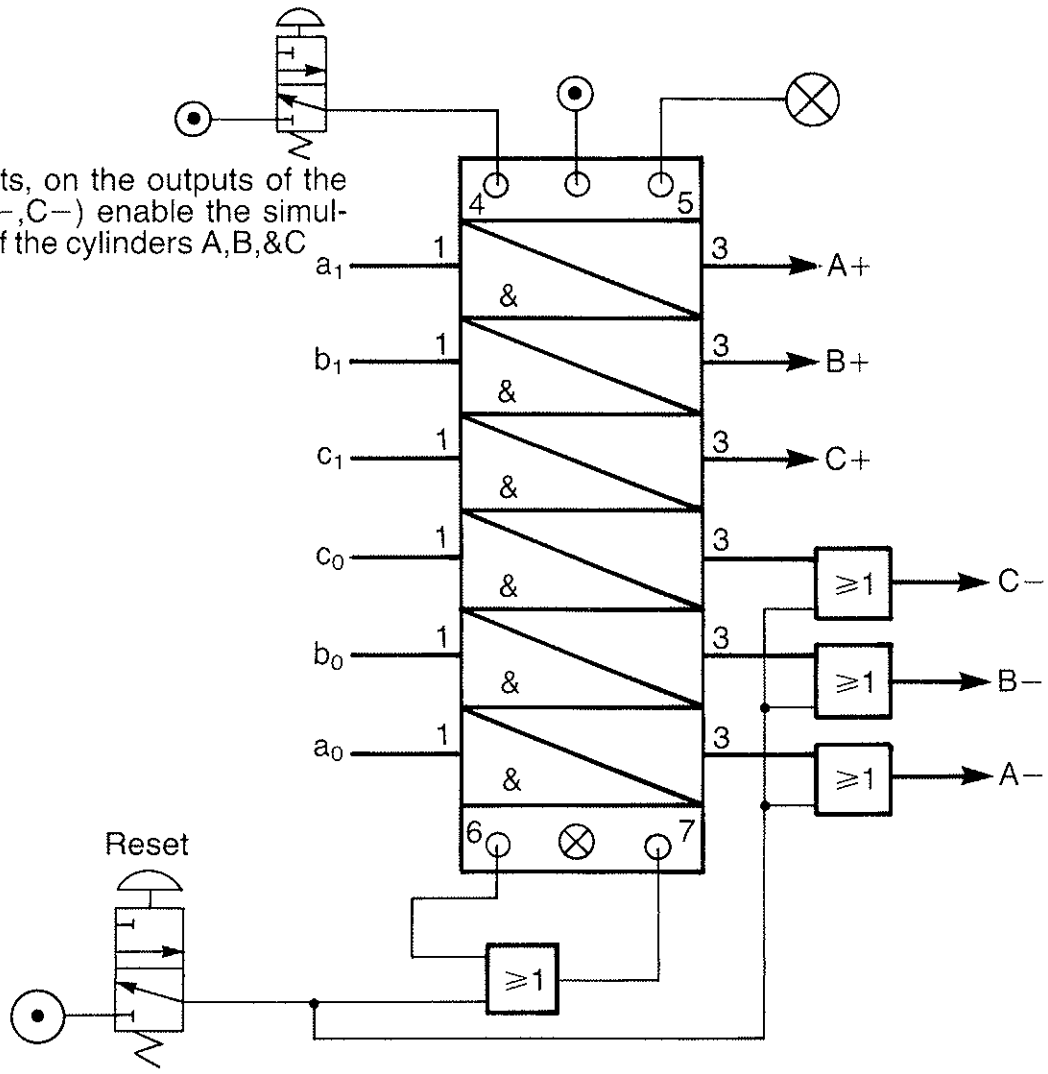

Different modes of operation

Simultaneous movements

When 2 outputs are required from one module, a tee connection is placed on the output. An extra "And" element is used to ensure both input signals are present before stepping on.

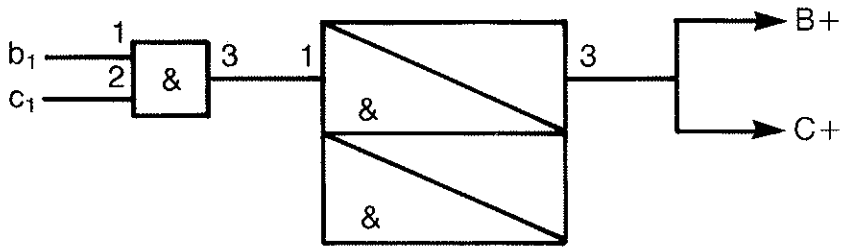

Repetitive cylinder movements

When an output is repeated in the cycle then the two outputs are piped to an "OR" element. The input is simply connected with a tee connection to both modules. There is no limit to the number of times an output can be repeated.

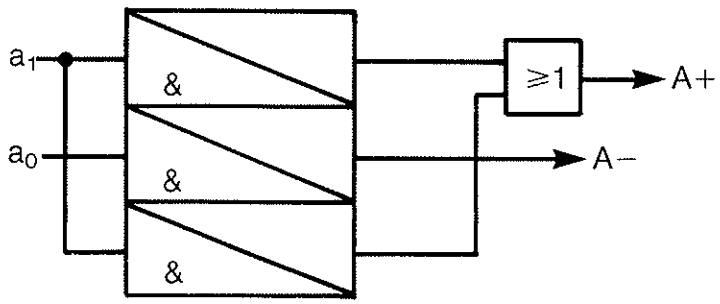

Changing the function of a Sequencer

The function of each sequence module can be changed by replacing the 'And' element which is screwed to the top of the sequence module, with other logic elements.

Timer function

The time delay will be started by the input a_1. A delay will occur before stepping on to the next step.
(see page 28)

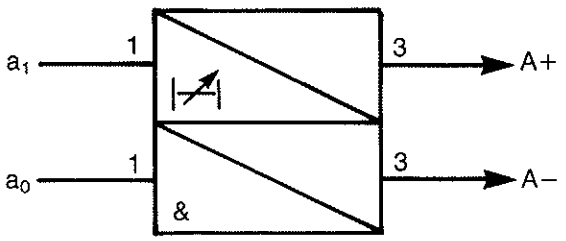

NOT function

The sequence module will only step-on when input a_0 is not present.
(see page 17)

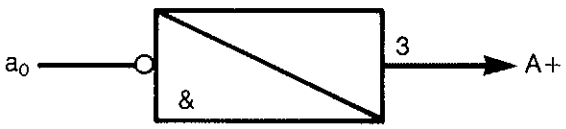

Pressure Decay Sensor

The sequence module will only step-on when the pressure level in the cylinder is reduced to zero.
(see page 45)

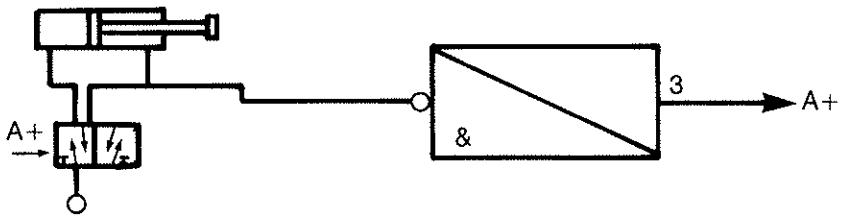

Bleed Sensor

When the sequence module is switched on a low pressure bleed is delivered out of port 1. When the bleed is blocked by the cylinder the relay switches and the sequencer steps on.
(see page 34)

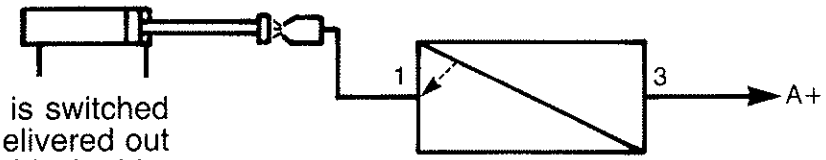

5

5 — APPLICATION EXERCISES

— Automatic paint spray station

— Packaging of powdered products

— Card stamping machine

— Double crimping

— Automatic drilling of revolving parts

— Silk screen printing machine

Crouzet®

Automatic paint spray station

Operating mode:

Cycle by cycle

Operation:

The part is installed manually.
When the **dcy** button (departure cycle) is pressed:

— Cylinder **A** rod out
Regulated speed → Part is sprayed

— Cylinder **A** rod in
Fast speed → Initiation for new cycle

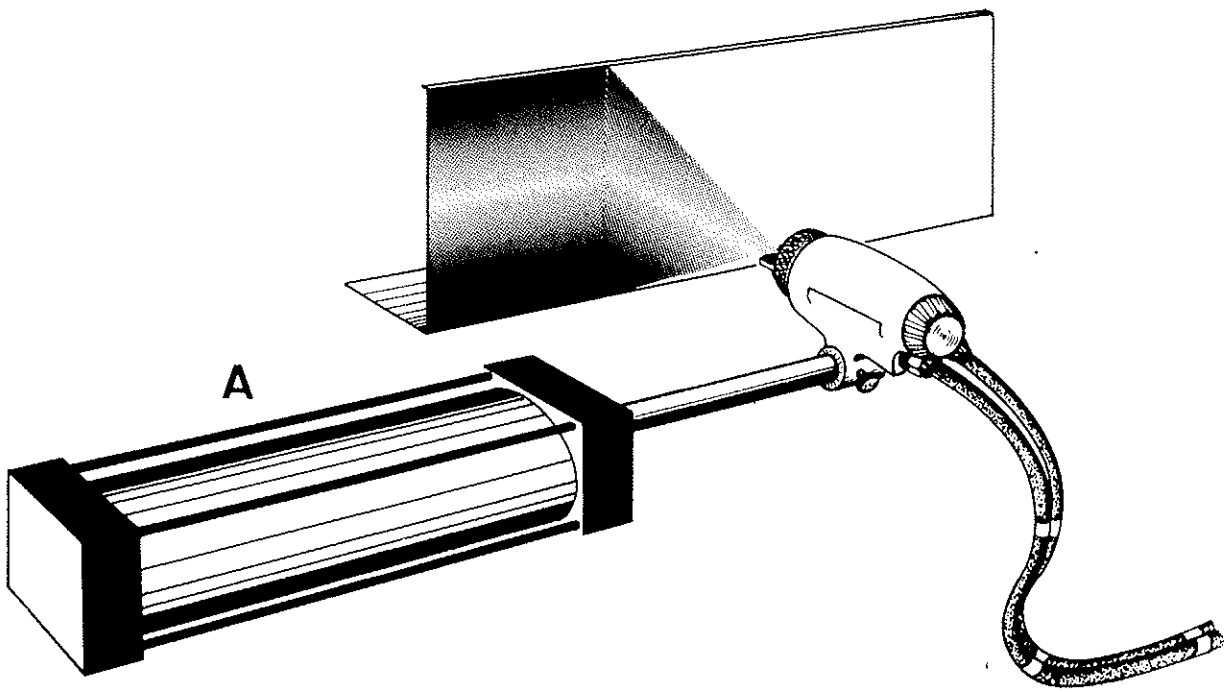

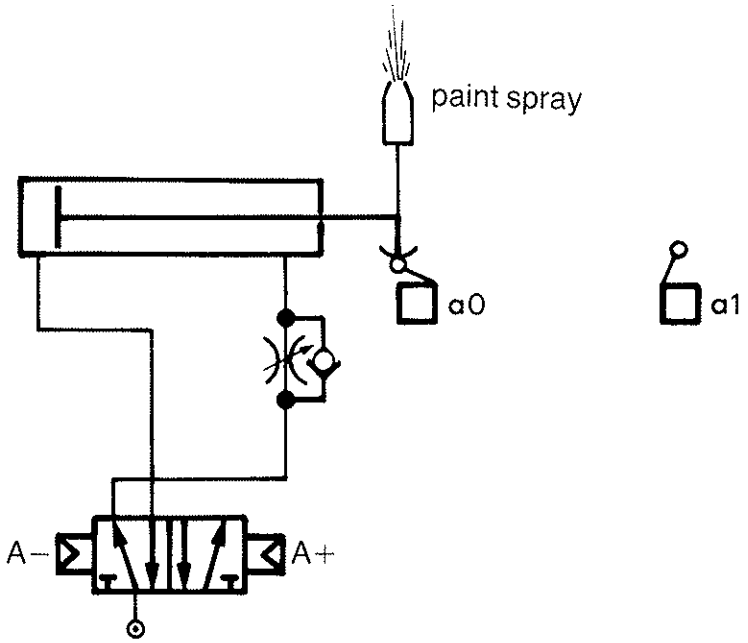

Resolution by reasoning

Logic equations
A+ = a0.m
A− = a1

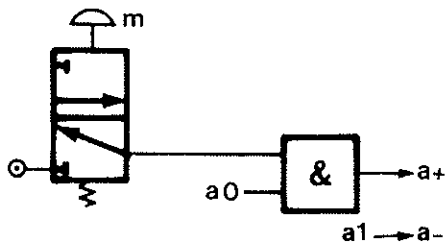

1st solution

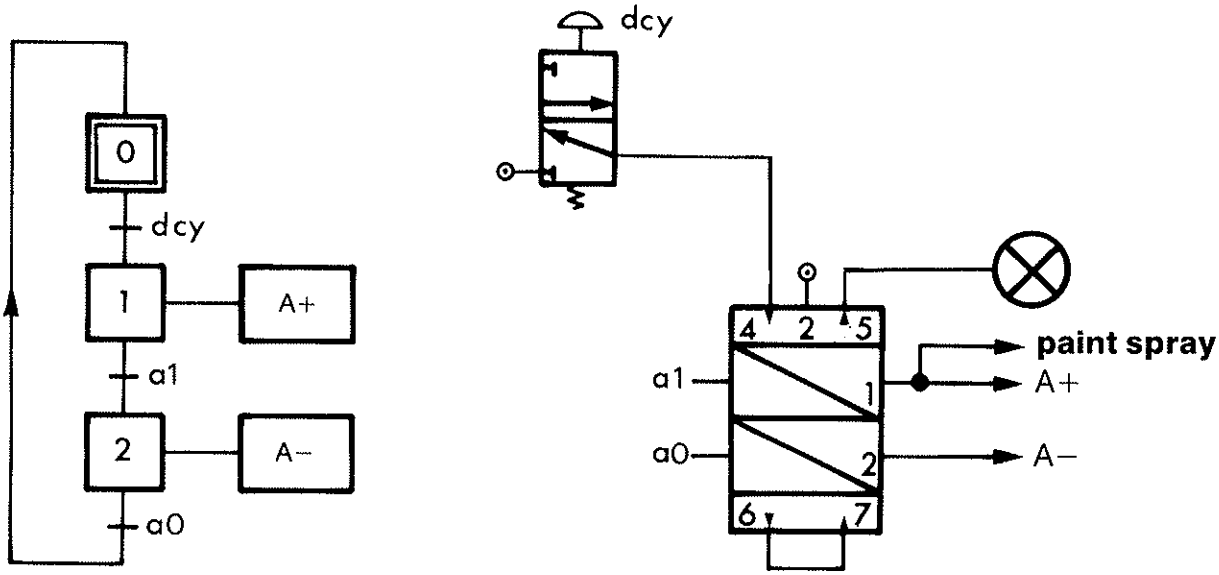

2nd solution

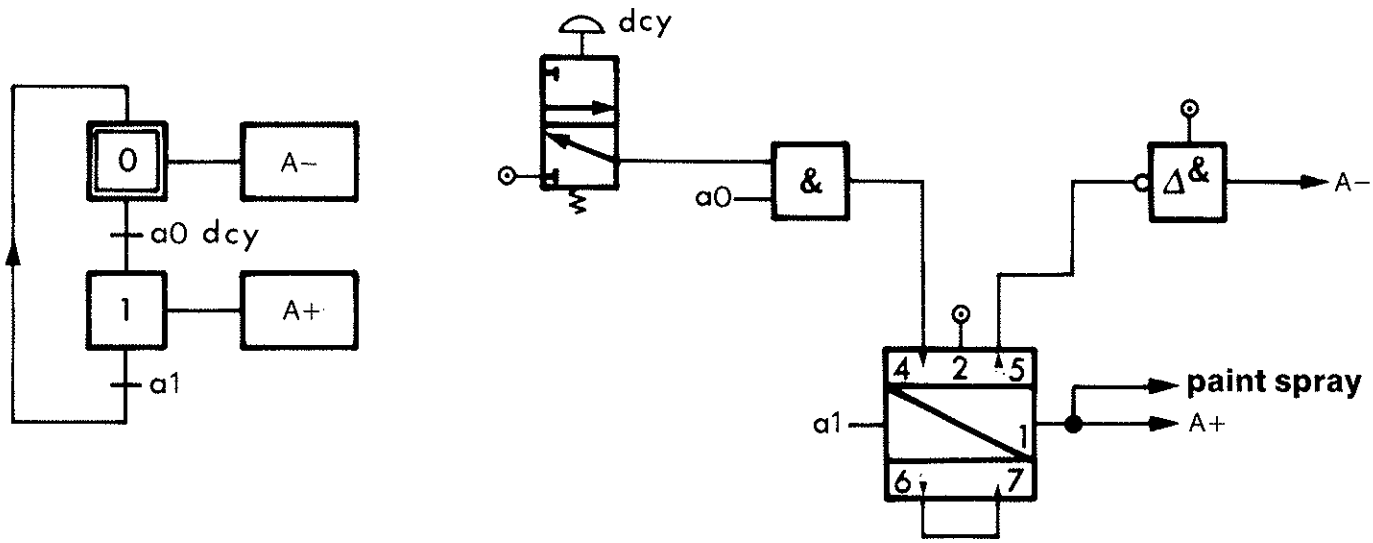

Packaging of powdered products

Operating mode:

Cycle per cycle

Operation:

A box is placed manually under the hopper. Detector p checks the box is present
The cycle will only begin if the two following conditions are met:

There is an empty box under the hopper
AND
Activation of cycle departure button **dcy**

— Cylinder **B** rod out
— Cylinder **A** rod in and out
— Cylinder **B** rod in

Door closed
Preparation of one dose of product
Transfer of one dose of powdered product into box

In order to prevent the product from sticking to the sides of the hopper a vibrator can be added (see diagram page 64).

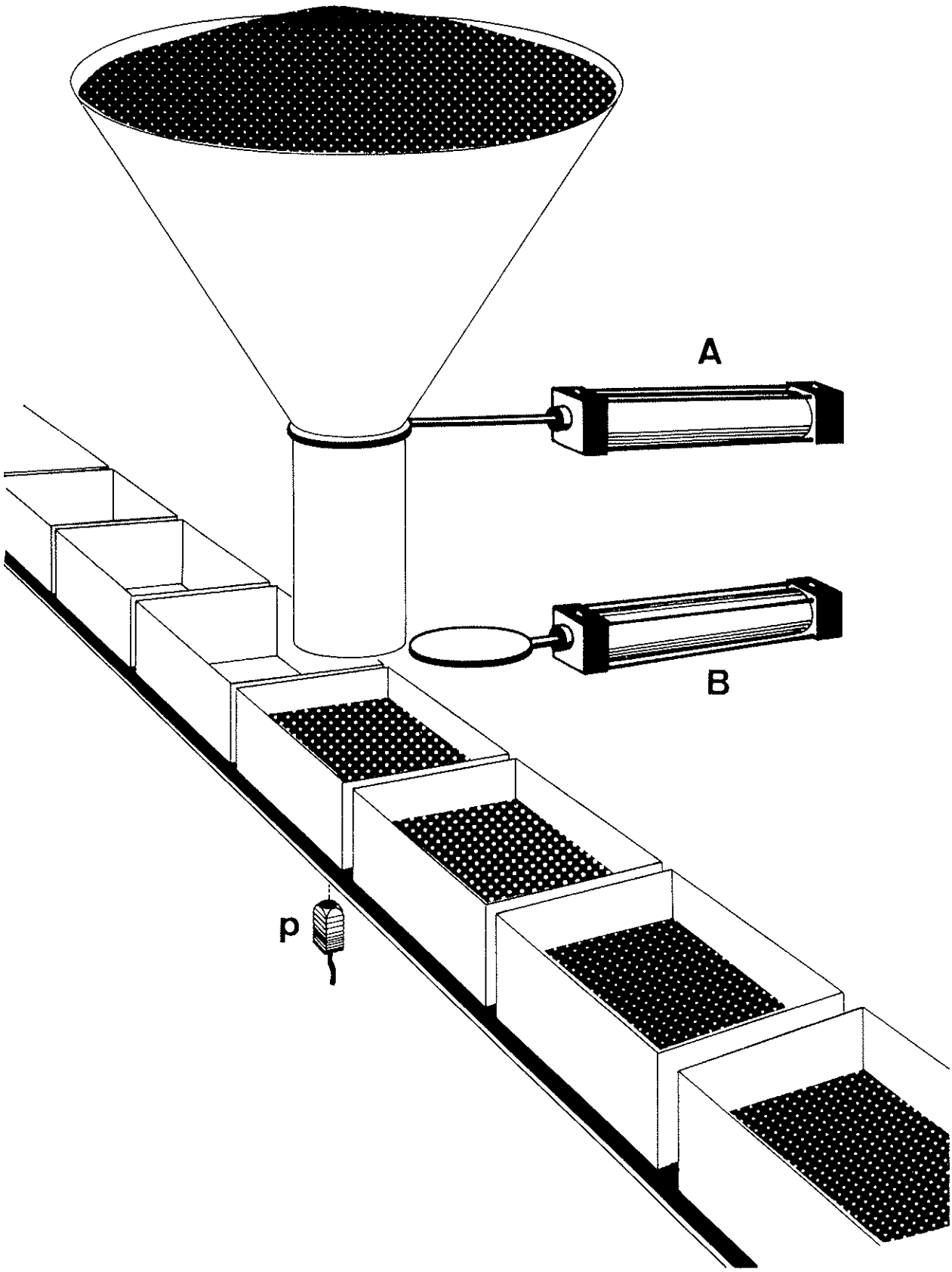
A
B
p

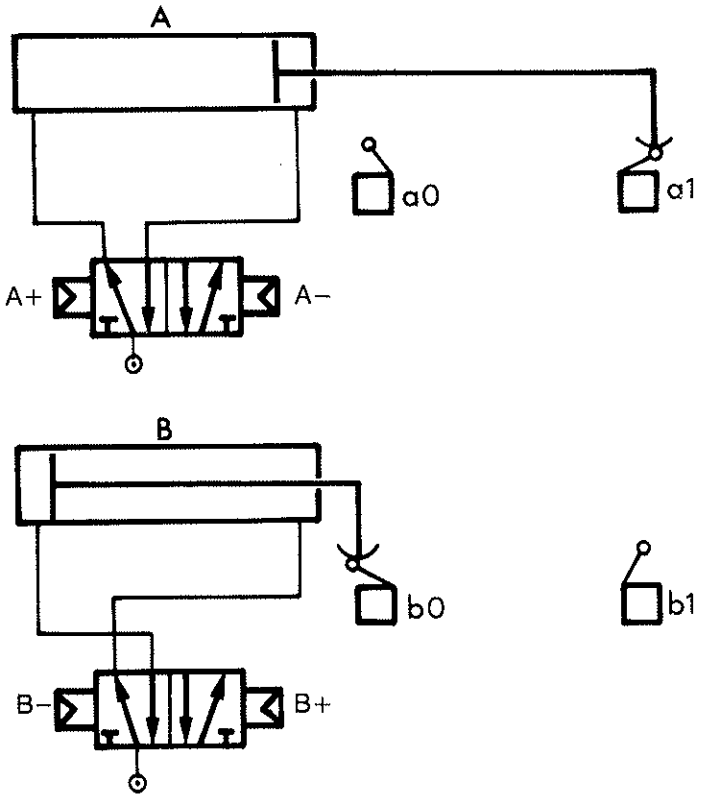

Resolution by reasoning

Logic equations
B+ = b0.m
A− = b1.a1
A+ = a1
B− = b1.a1

Sensors a1.b1 should result in two different orders (or signals).
A memory must be added to differentiate them.

B+ = b0.m
A− = a1.b1.$\bar{x}$
X0 = b0

B− = a1.b1.x
A+ = a0
X1 = a0

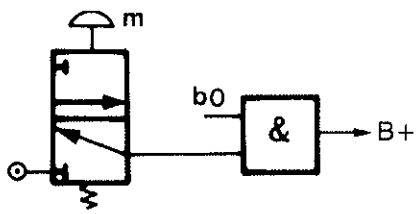

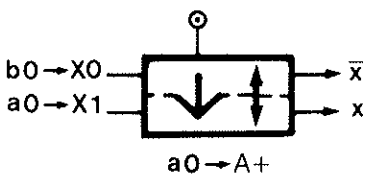

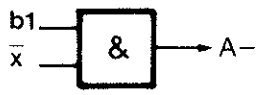

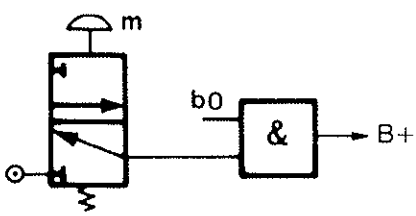

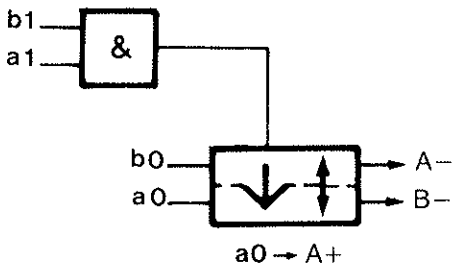

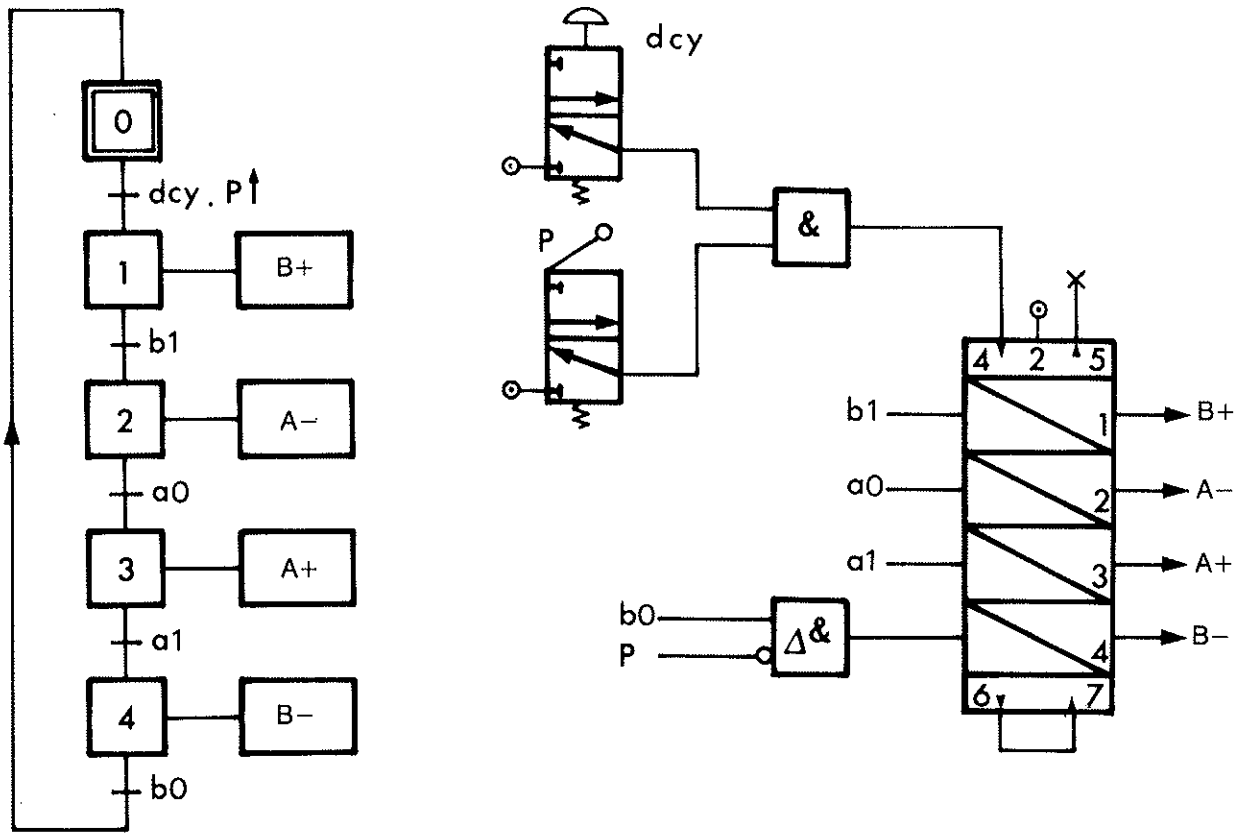

Hopper vibrator

By feeding a maintained low pressure signal to one side of a bi-stable valve a spring return action can be obtained.

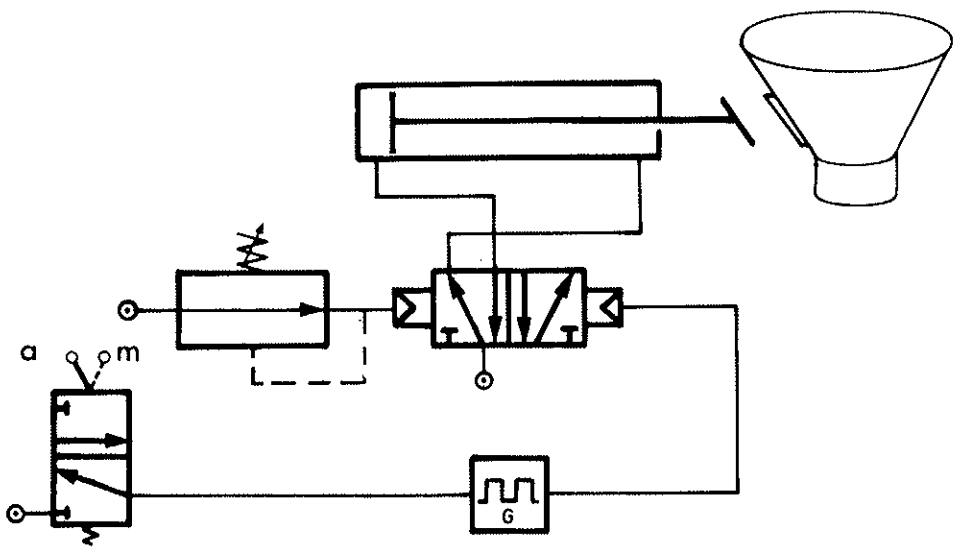

Card stamping machine

Operating mode:

Cycle per cycle

Operation:

The card to be stamped is installed manually.
When the start cycle button **dcy** is pressed the following occurs:

— Cylinder **A** rod out	→ Stamp is inked
— Cylinder **A** rod in	→ Stamp is raised
— Cylinder **B** rod in	→ Card is positioned in axis of cylinder **A**
— Cylinder **A** rod out	→ Card is printed
— Cylinder **A** rod in	→ Initiation for new cycle
— Cylinder **B** rod out	→ Positioning of inking unit in axis of cylinder **A.**

the printed card is removed manually.
The rest position is displayed by a light.

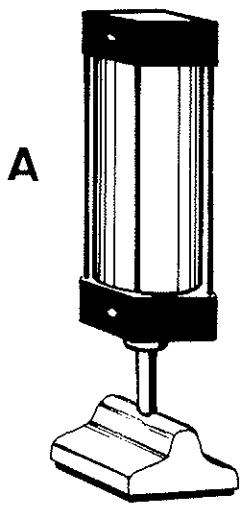

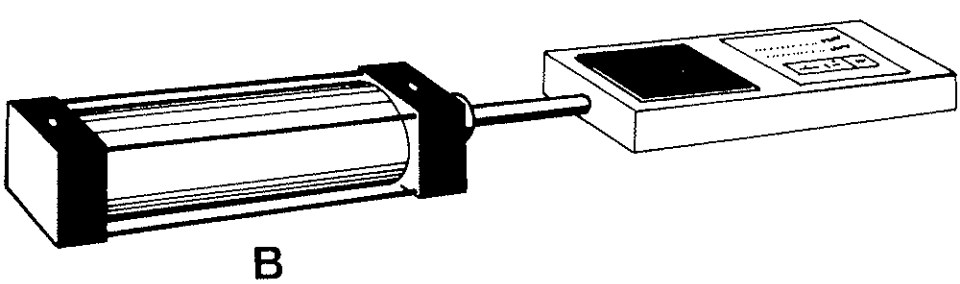

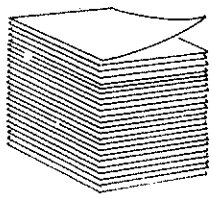

Crouzet

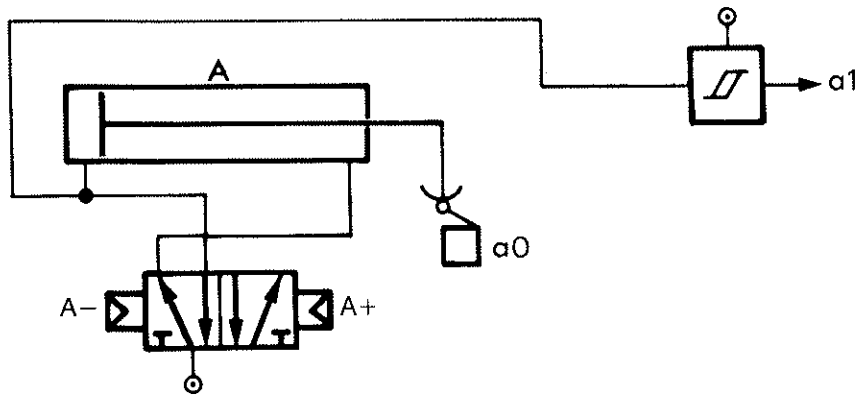
A
a1
a0
A–
A+

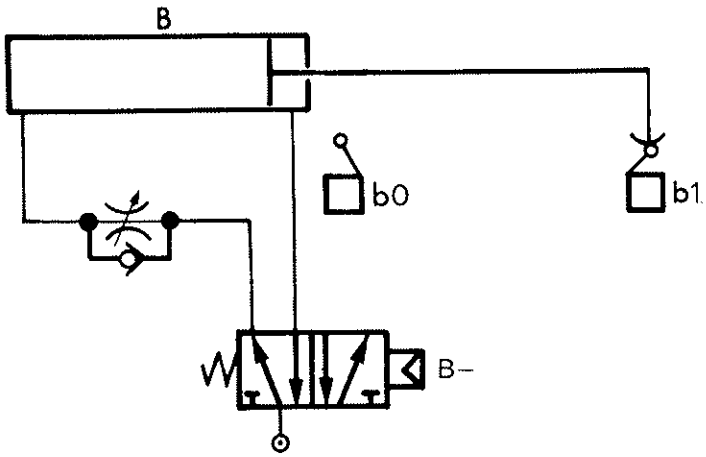
B
b0
b1
B–

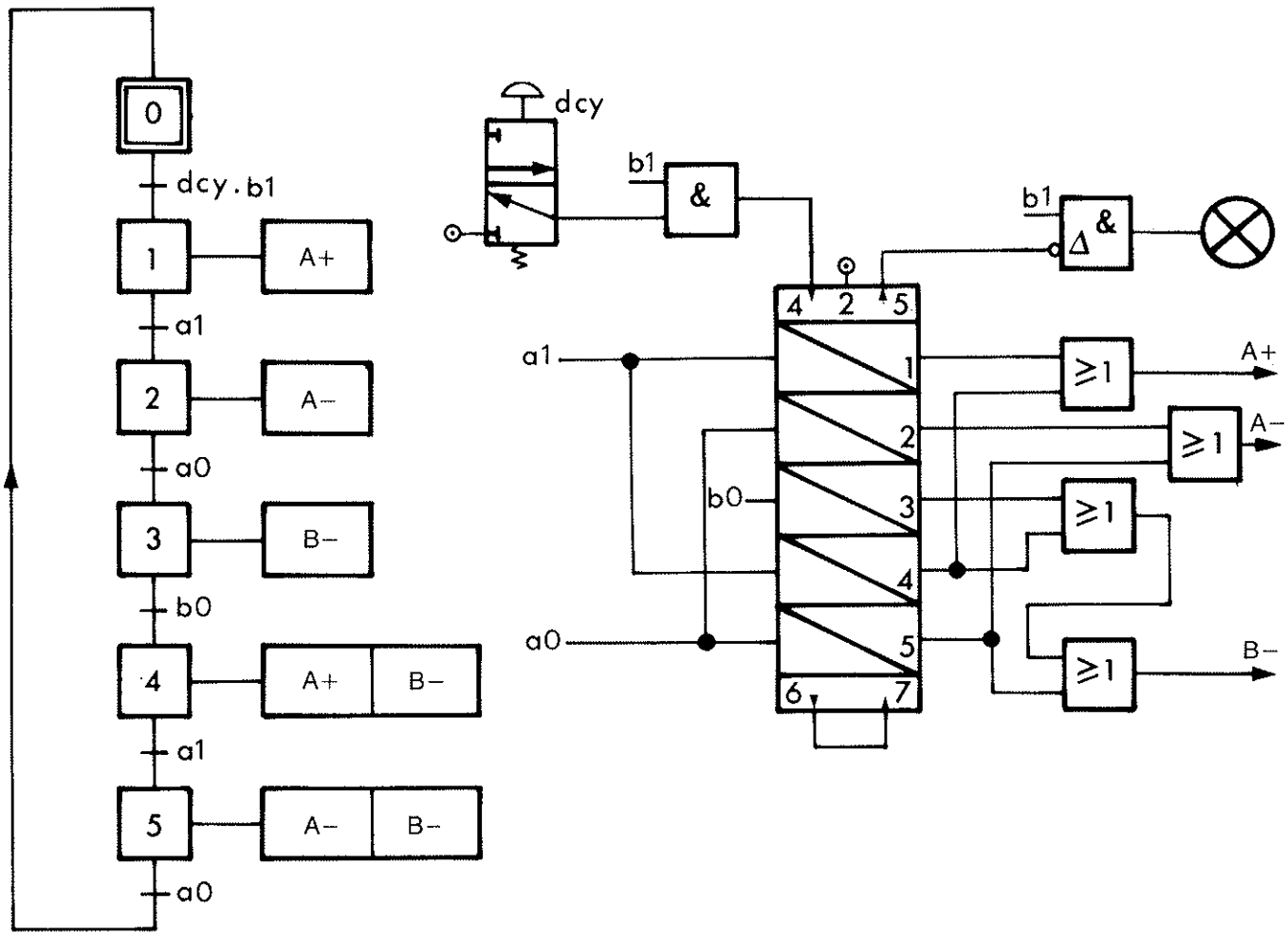
0
dcy . b1
1
A+
a1
2
A–
a0
3
B–
b0
4
A+
B–
a1
5
A–
B–
a0
dcy
b1
&
b1
Δ
&
4
2
5
1
2
3
4
5
6
7
a1
b0
a0
≥1
≥1
≥1
≥1
A+
A–
B–

Double crimping

Operating mode:

Cycle per cycle

Operation:

When the two buttons, **m1** and **m2** of the dual safety control are activated simultaneously, the following occurs:

— Cylinder **A** rod out ⟶ Part is grasped

— Double stroke of cylinder **B** ⟶ Part is crimped

— Cylinder **A** rod in ⟶ Part is released

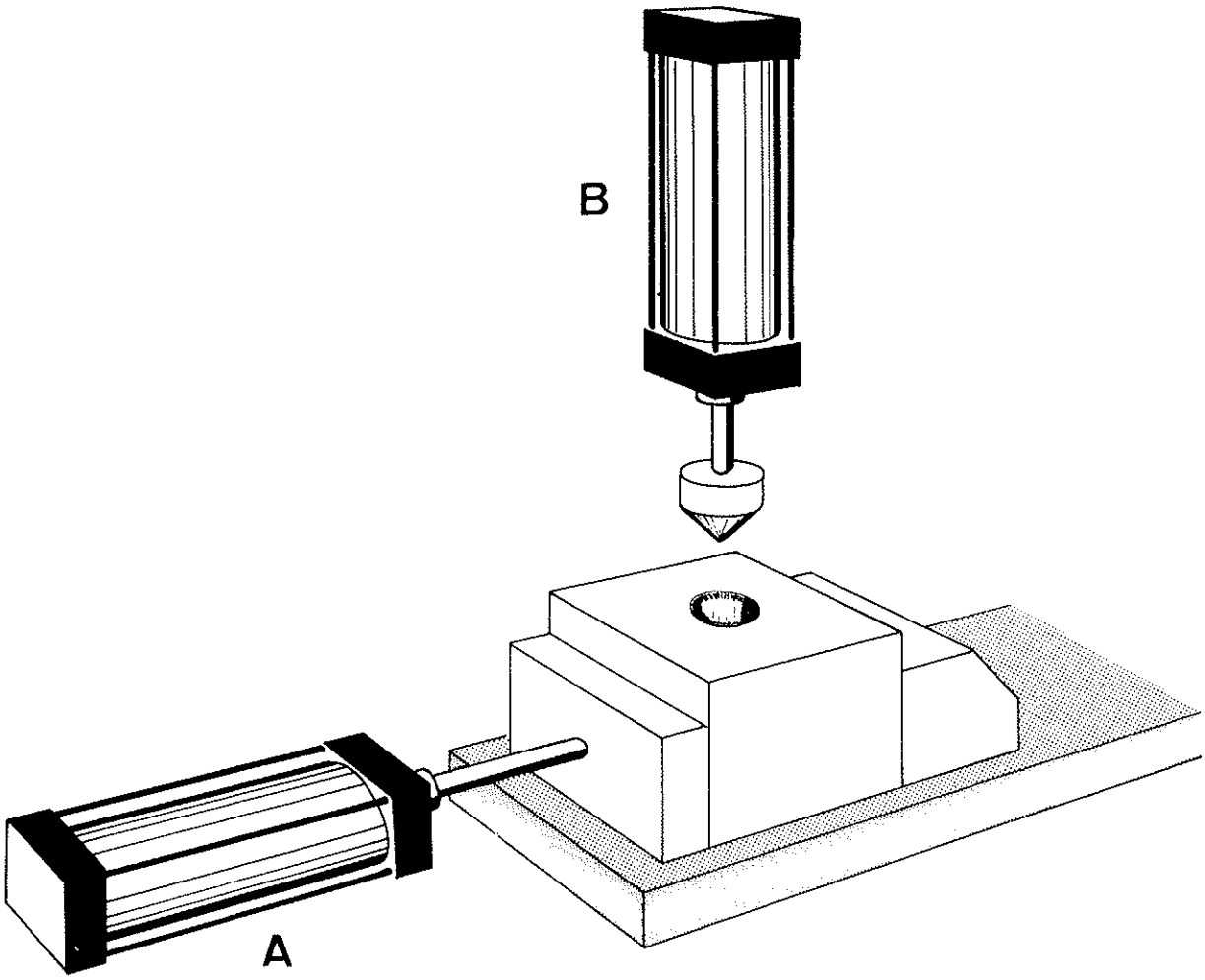

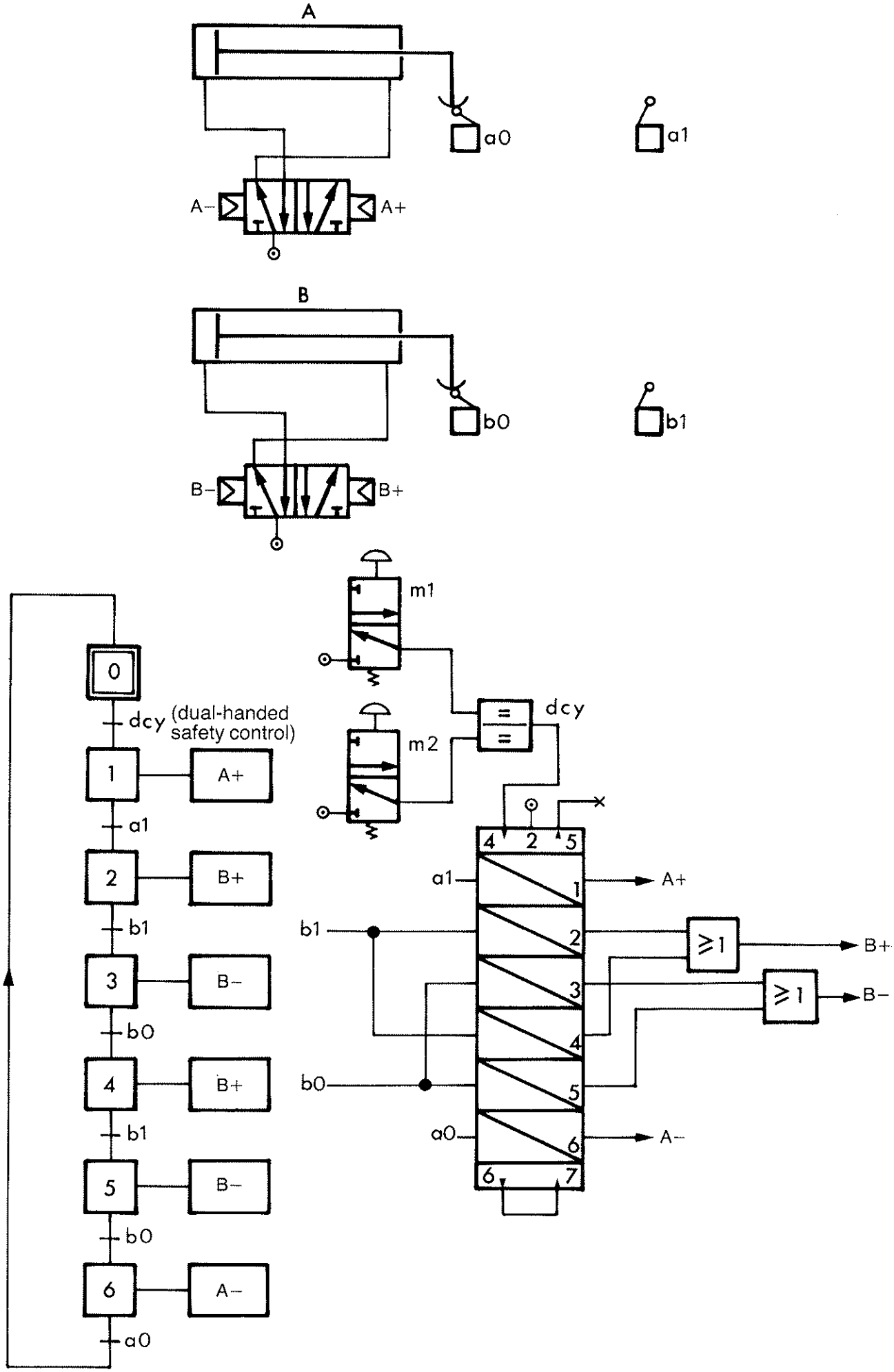
A
a0
a1
A–
A+
B
b0
b1
B–
B+
m1
m2
=
=
dcy
0
dcy (dual-handed safety control)
1
A+
a1
2
B+
b1
3
B–
b0
4
B+
b1
5
B–
b0
6
A–
a0
4 2 5
a1
1
A+
b1
2
≥1
B+
3
≥1
B–
4
b0
5
a0
6
A–
6 7

Automatic drilling of revolving parts

Operating mode:

Cycle per cycle

Operation:

The part is placed manually in the vice.
When the start cycle button is pressed the following occurs:

— Cylinder **A** rod out	→	Part is grasped and drill unit motor starts
— Cylinder **B** rod out	→	Part is drilled
— Cylinder **B** rod in	→	Drilling ends and drill unit motor stops
— Cylinder **A** rod in	→	Part is released
— Cylinder **C** rod out	→	Part is evacuated
— Cylinder **C** rod in	→	Initiation for a new cycle

Note: The vice force is checked by a pressure decay sensor.
The drill unit descent and machined part evacuation are regulated.

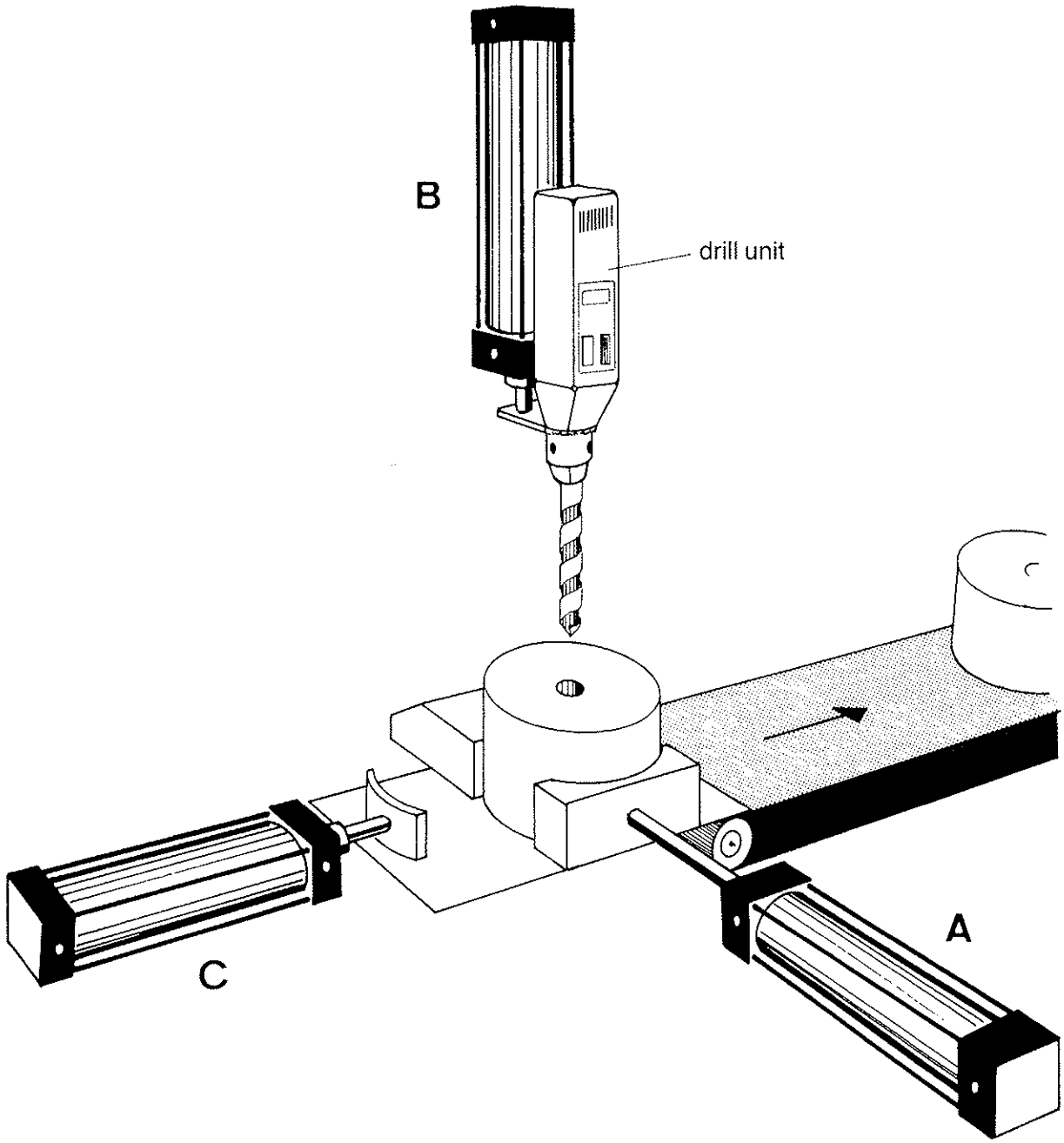
B
drill unit
A
C

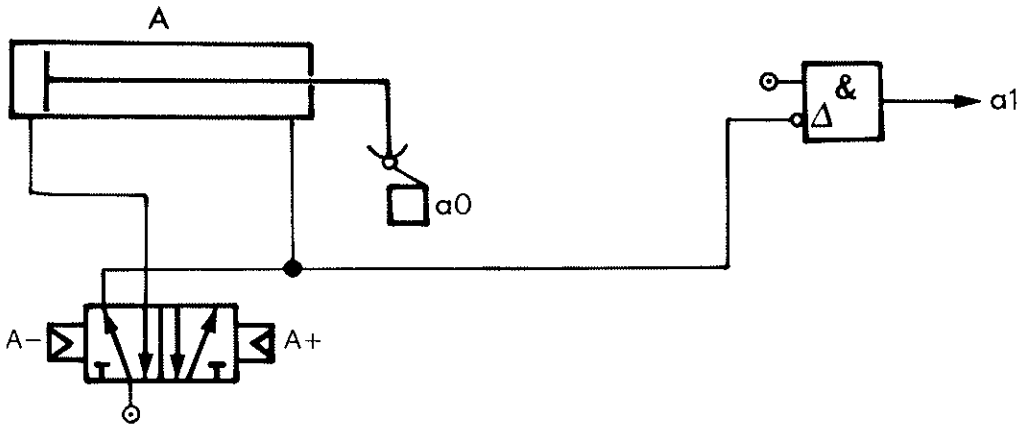
A
a0
&
Δ
a1
A−
A+

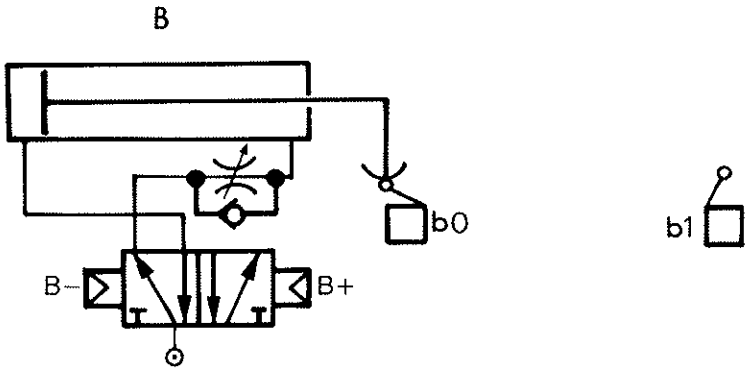
B
b0
b1
B−
B+

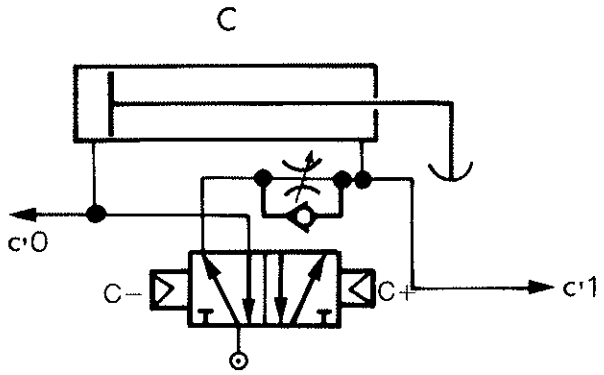
C
c'0
C−
C+
c'1

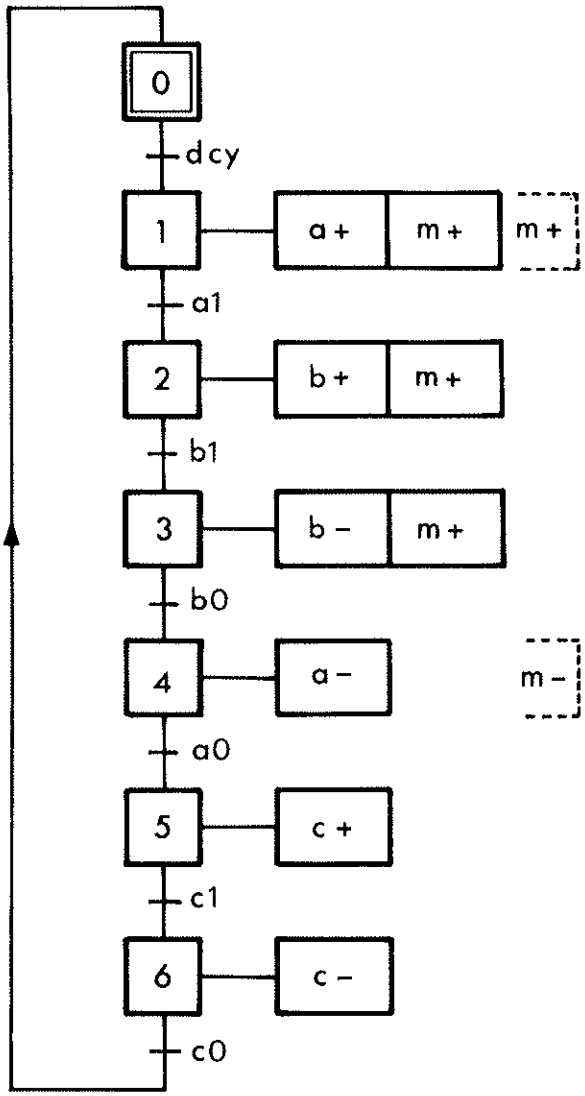
0
dcy
1
a+
m+
m+
a1
2
b+
m+
b1
3
b−
m+
b0
4
a−
m−
a0
5
c+
c1
6
c−
c0

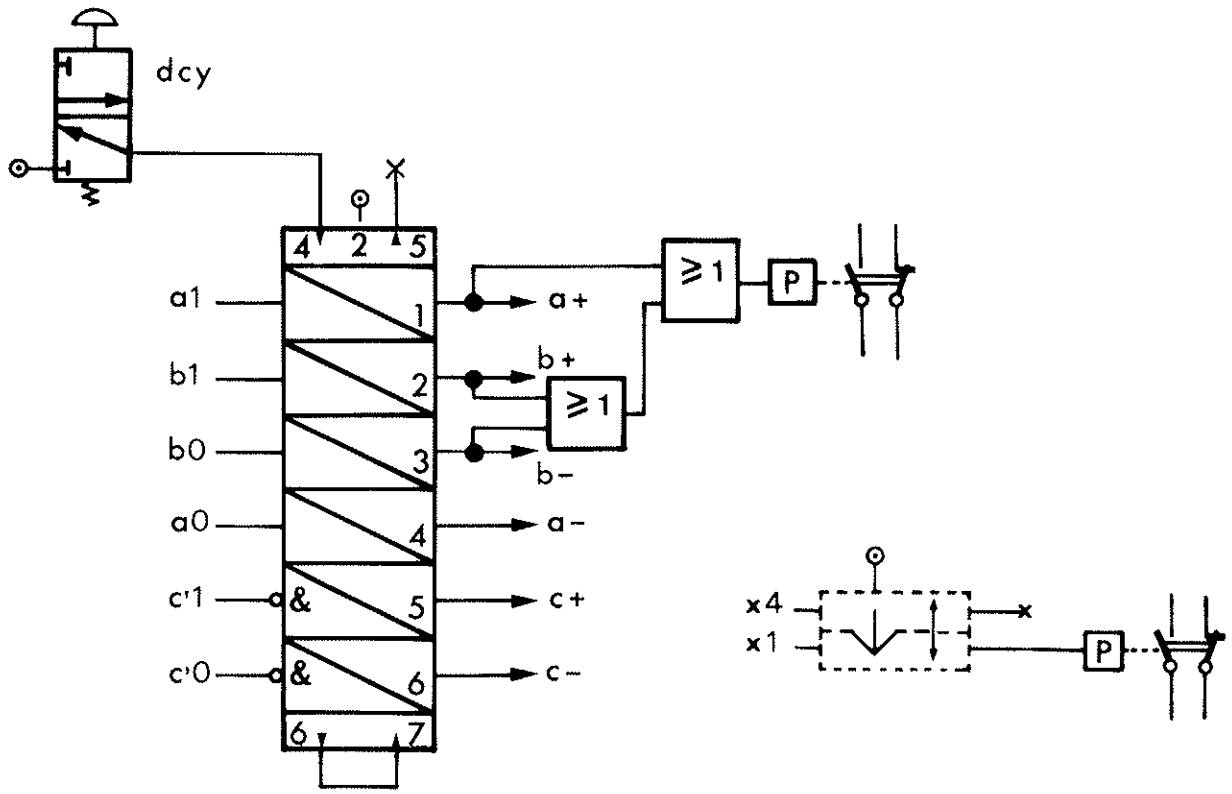
dcy
4
2
5
a1
b1
b0
a0
c'1
c'0
1
2
3
4
5
6
&
&
a+
b+
b−
a−
c+
c−
≥1
≥1
P
6
7
x4
x1
x
P

Silk screen printing machine

Operating mode:

Automatic

Operation:

When the automatic start button **m** is pressed, the following occurs:

— The air in suction pad **V** is evacuated	→	**Cylinder C** rod in picture moves forward one step
— Cylinder **B** rod out **AND** cylinder **A** rod out	→	One picture is cut **AND** One picture is printed
— Vacuum in suction pad **V** is broken	→	Cylinder **C** rod out **AND** Cylinder **B** rod in
— The air in suction pad **V** is evacuated	→	Cylinder **C** rod in picture moves forward one step
— Cylinder **B** rod out **AND** **cylinder A** rod in	→	Picture is cut **AND** one picture is printed
— Vacuum in suction pad **V** is broken	→	Cylinder **C** rod out **AND** cylinder **B** rod in

Two pictures will therefore be printed in one mechanical machine cycle.

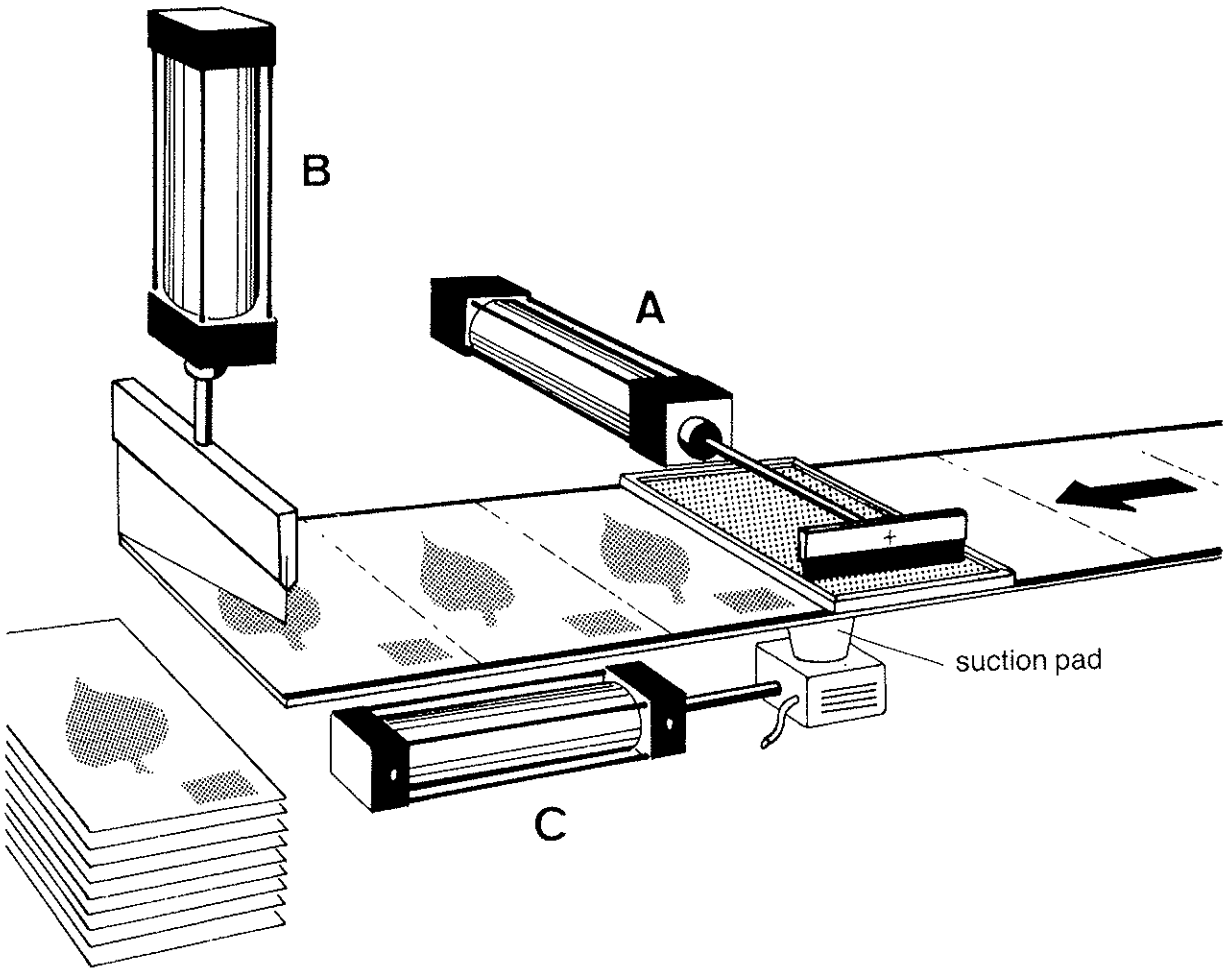
B
A
suction pad
C

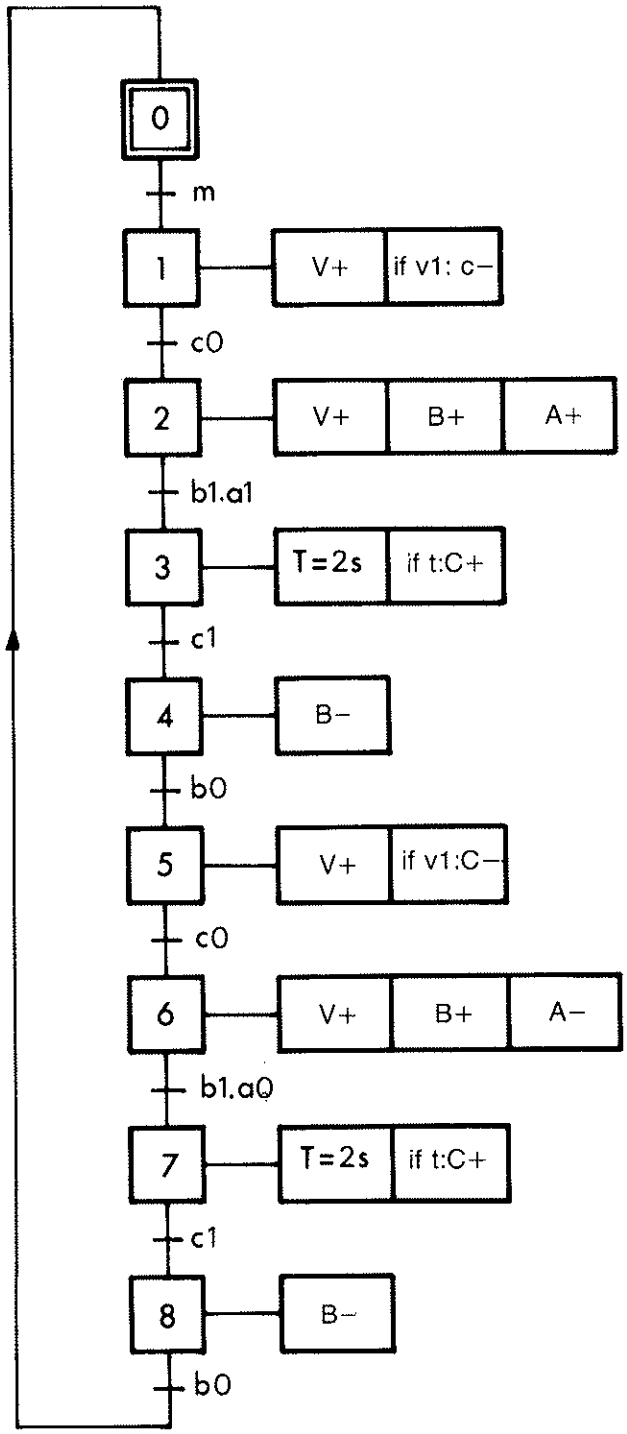
0
m
1
V+
if v1: c−
c0
2
V+
B+
A+
b1.a1
3
T=2s
if t:C+
c1
4
B−
b0
5
V+
if v1:C−
c0
6
V+
B+
A−
b1.a0
7
T=2s
if t:C+
c1
8
B−
b0

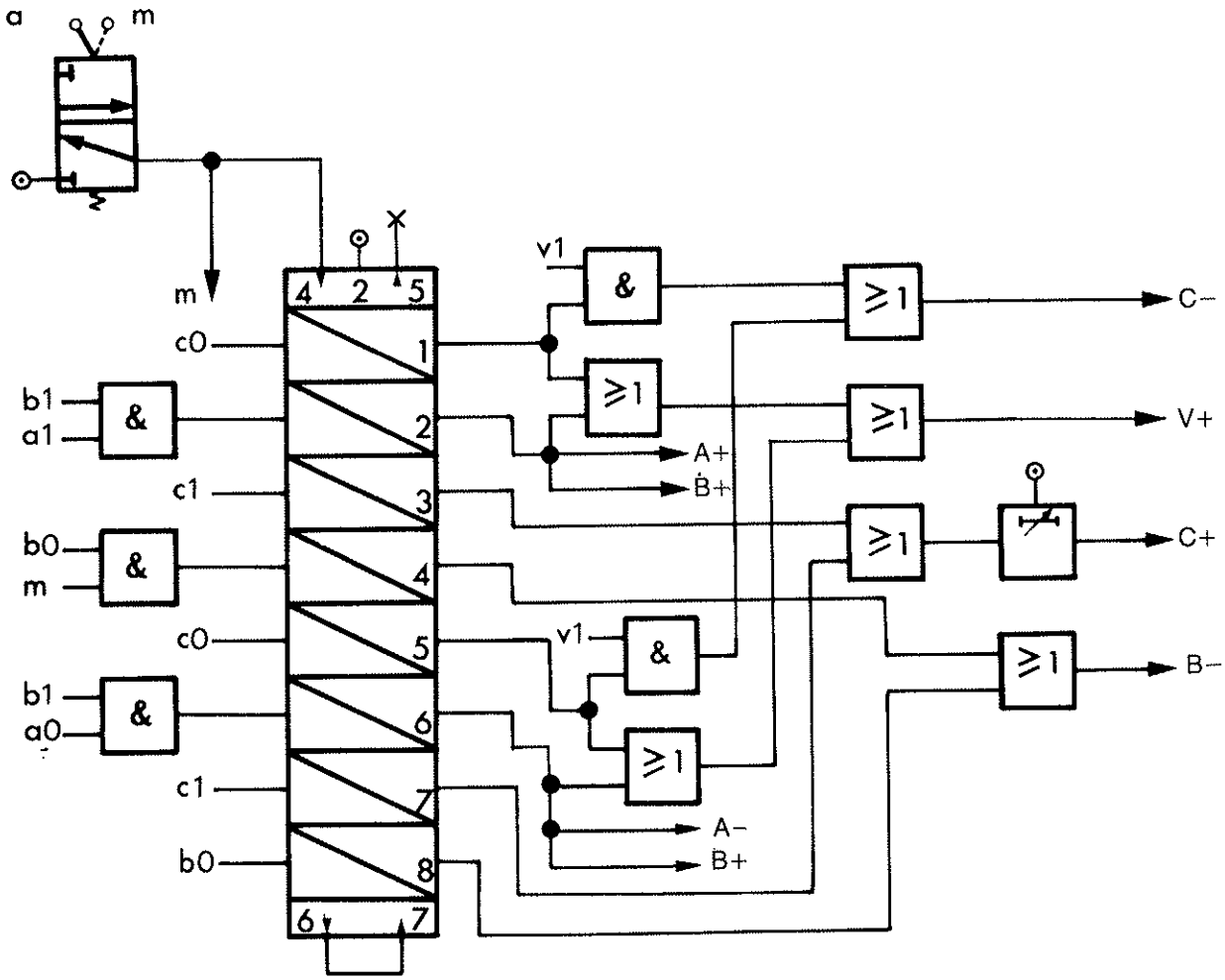
a
m
m
4
2
5
c0
1
b1
a1
&
2
c1
3
b0
m
&
4
c0
5
b1
a0
&
6
c1
7
b0
8
6
7
v1
&
≥1
A+
B+
v1
&
≥1
A−
B+
≥1
≥1
≥1
≥1
C−
V+
C+
B−

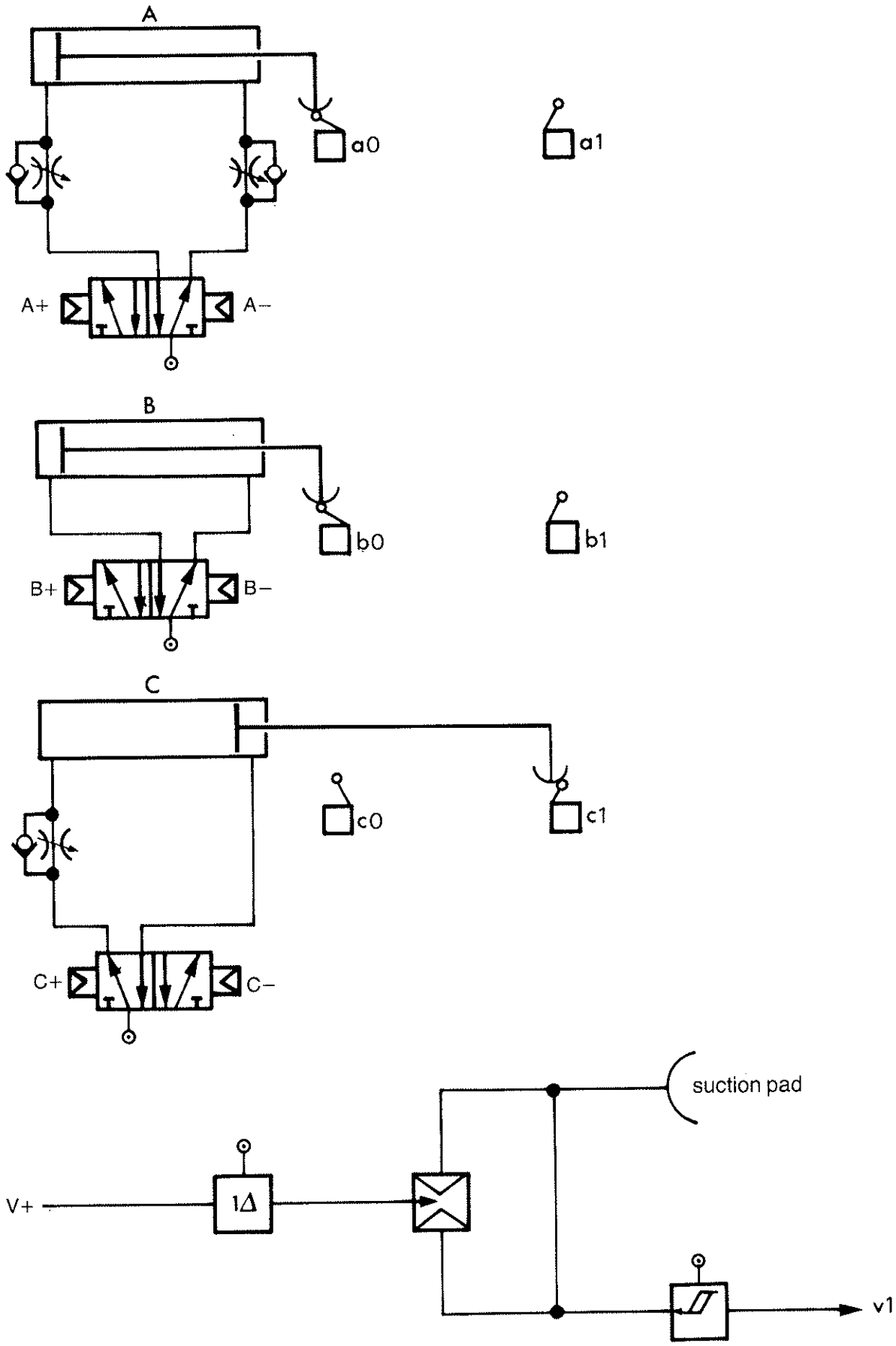
A
a0
a1
A+
A–
B
b0
b1
B+
B–
C
c0
c1
C+
C–
suction pad
V+
1Δ
v1

Notes

Notes

Notes

Crouzet... international industrial Group...

5600 employees - 16 factories - 14 subsidiaries - 300 sales points throughout the world

Sectors of activity :

Aeronautics - Automation Components - Domestic Appliance Components - Space - Electronic payment - Telecommunications - Transport

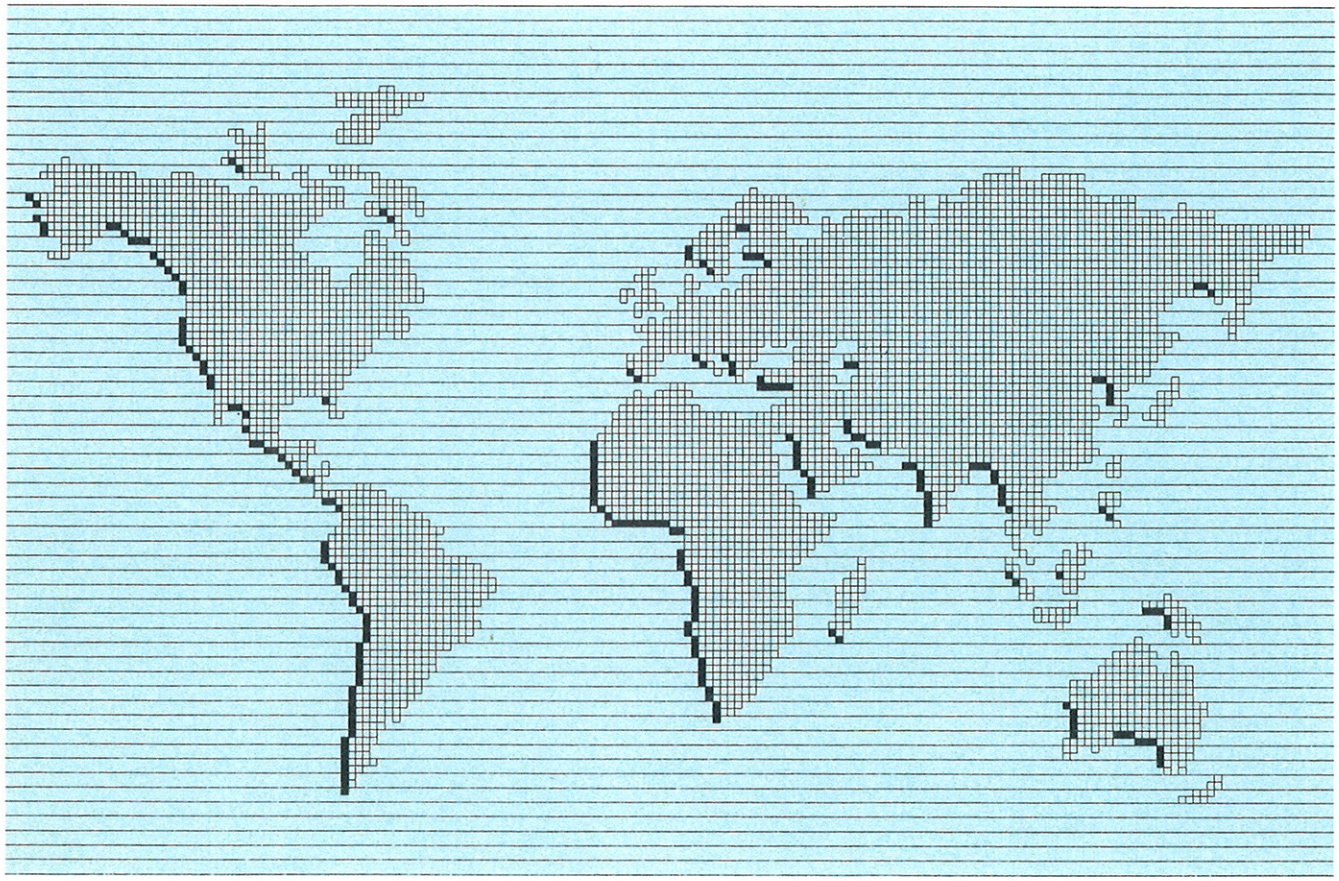

France

Valence
Crouzet SA - Division Composants d'Automatismes
25, rue Jules Védrines
F-26027 Valence cedex
Tél. : (75) 42.91.44 - Télex : 345758 F

Paris : Tél. : (1) 805.39.50 - Télex : 220841 F
Toulouse : Tél. : (61) 62.16.03 - Télex : 530825 F
Rouen : Tél. : (35) 71.32.93 / 71.45.47
Valence : Tél. : (75) 55.15.15 - Télex : 345574 F
Lille : Tél. : (20) 52.28.42 - Télex : 130475 F
Schiltigheim : Tél. : (88) 33.19.65 - Télex : 880475 F
Nantes : Tél. : (40) 47.17.41 - Télex : 710442 F

Belgique

Bruxelles
Ets Crouzet SA - Place de Houffalize 22-24 - Boîte 2
B-1030 Bruxelles - Tel. : (02) 241 41 23
Telex : 23915 B

Deutschland

Düsseldorf
Crouzet GmbH - Postfach 22 01 20
D-4000 Düsseldorf 12
Niermannsweg 3-5 - D-4006 Erkrath Unterfeldhaus
Tel. : 02 11 / 25 02.0 - Telex : 8581835 D

Berlin : Tel. : 0 30 / 7 03 43 66
München : Tel. : 0 89 / 3 19 10 21
Göppingen : Tel. : 0 71 61 / 36 95 - Telex : 727870 D

España

Barcelona
Crouzet SA - Calle Córcega 596 / 598 - E-Barcelona 25
Tel. : (93) 256 92 09 / 256 91 02 - Telex : 53091 E

Madrid : Tel. : (91) 448 12 19 / 445 32 65 - Telex : 43493 E
Bilbao : Tel. : (94) 443 63 94 / 443 61 32 - Telex : 31495 E
Valencia : Tel. : (96) 326 15 04 - Telex : 64533 E

Italia

Milano
Crouzet S.A. - Via Brembo, 27 - 20139 Milano Italia
Tél: 010 392 533 352 - Télex: 331455

Torino : Tel. : (011) 38.34.31
Padova : Tel. : (049) 65.06.55
Bologna : Tel. : (051) 55.74.75

Mexico

Mexico
Crouzet Mexicana SA - 19 sur N° 3540
Puebla, Pue - 72410 Mexico
Tel. : (22) 40 74 09 / 40 75 13 - Telex : 0178126

Nederland

Zoeterwoude
Crouzet BV - Industrieweg 17
NL-2382 NR Zoeterwoude
Tel. : (071) 41.11.21 - Telex : 39086 NL

Suisse

Zürich
Crouzet AG - Zone Industrielle - Moosweg 1
CH-2555 Bruegg/Biel
Tél: 010 41 032 53 24 24 - Télex 349640

Sverige

Stockholm
Crouzet AB - Malmgårdsvägen 63 - Box 11086
S. 100 61 Stockholm
Tel. : (8) 44 98 10 - Telex : 12850 S

United Kingdom

Farnborough
Crouzet Ltd - 108 Hawley Lane
GB-Farnborough-Hants - GU14 8HY
Tel. : (0252) 513211 - Telex : 858612 G

U.S.A.

Schaumburg
Crouzet Controls Inc. - 1083 State Parkway
Schaumburg - IL 60195
Tel. : (312) 843.2200 - Telex : 206297 SHBU

Ref. 03-02-85

Right to modify reserved

Printed by The Midas Press 04-85